CHONGQING JINLONG OUTDOOR PRODUCTS CO., LTD.

Product Brochure

COMPANY PROFILE

Founded in 2006, the company is a comprehensive company that focuses on the research and development, production and sales of police multifunctional belts, waist bags: military belts, military training belts, tactical vests, tactical kneepads, tactical backpacks, various types of webbings and other products. In 2022, the company was rated as: specialized and new enterprises, national high-tech enterprises. The factory has 20 years of experience in the production industry.

The factory has webbing workshops, super glue compound machine workshops, sewing machine workshops, belt production workshops, warehouses, exhibition halls and other areas, with a usable area of more than 8,000 square meters; there are more than 130 employees and more than 100 production equipment. The company is based on the production model of spot wholesale and customized samples. The company has always adhered to the basic principles of: honest operation, quality first, and quality service!

Products cover all parts of the country and are exported to overseas markets. Welcome new and old customers to visit the factory for on-site inspections and discuss cooperation! Looking forward to becoming your loyal friend and partner to create a mutually beneficial and win-win future!

CONTENTS

Multifunctional belts in stock series page01-10

Tactical inner belts in stock series .....Page 11--12

Tactical outer belts in stock series..... Page 13--14

Military training belts in stock series.....Page 15--15

Fixed shape bag in stock ..... Page 16--17

Single item in stock series..... Page18--19

Plastic steel sleeve in stock series..... Page20--21

Tactical outer belt display series..... Page22--25

Tactical bag display series..... page26--28

New standard six-piece multi-functional belt

Black/white/fluorescent green/three color optional

Inner belt

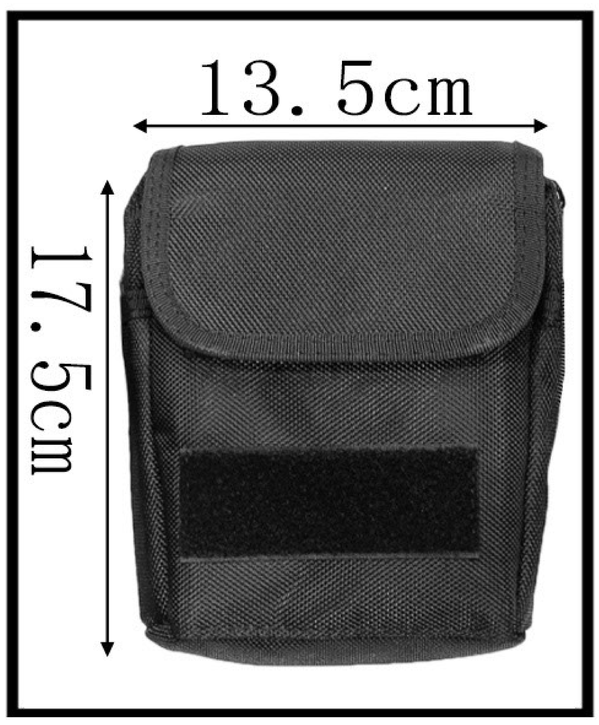

Package 8001-1

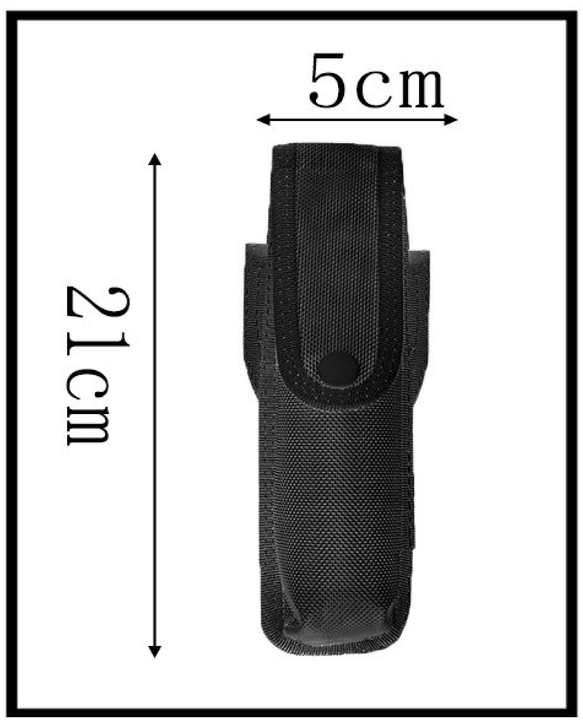

Rotary spray package 8001-2

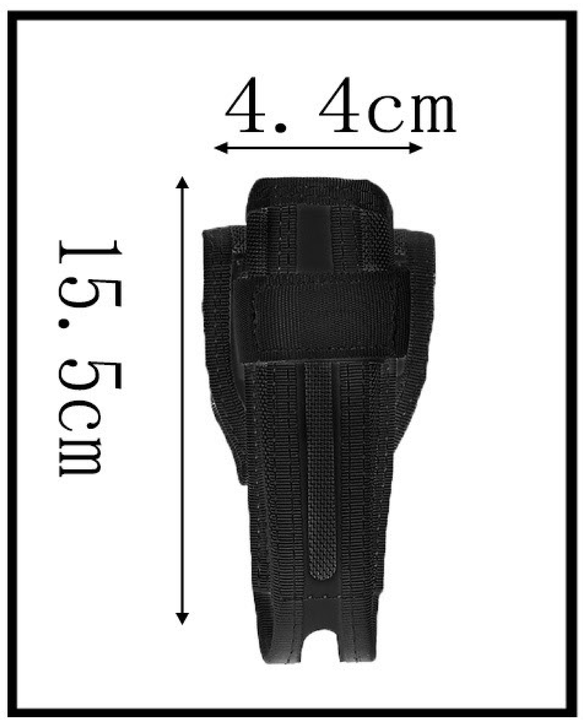

Rotating stick bag 8001-3

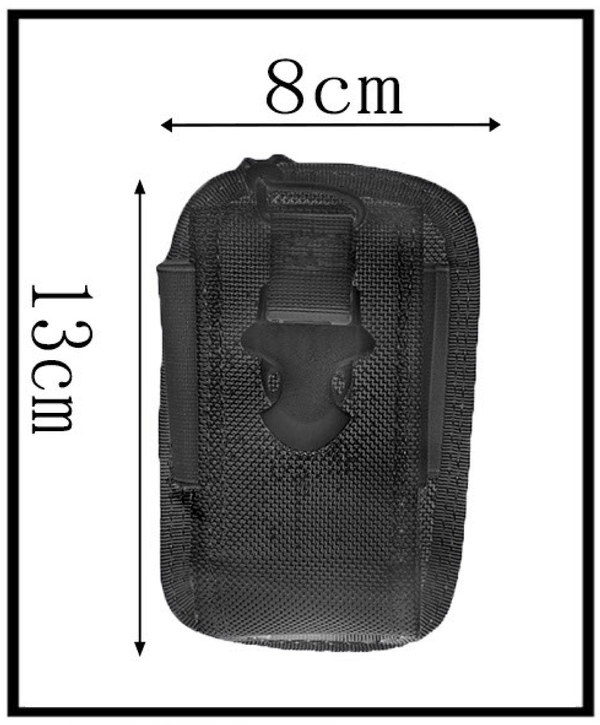

Walkie-talkie bag 8001-4

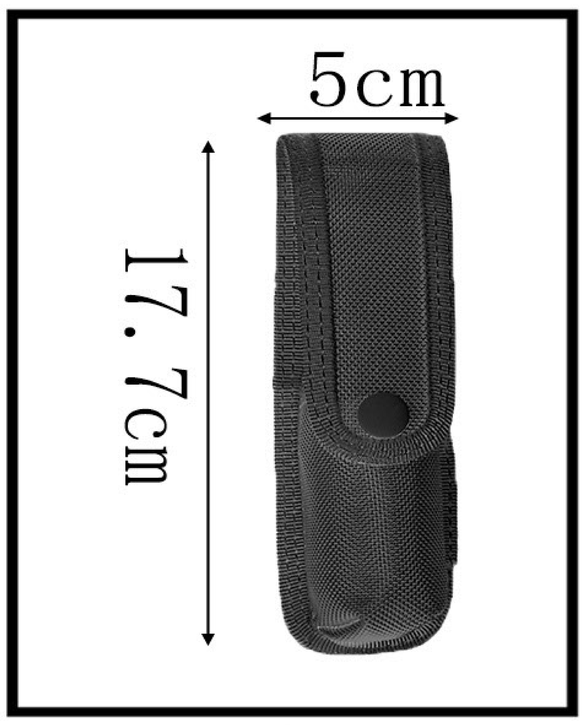

Flashlight bag 8001-5

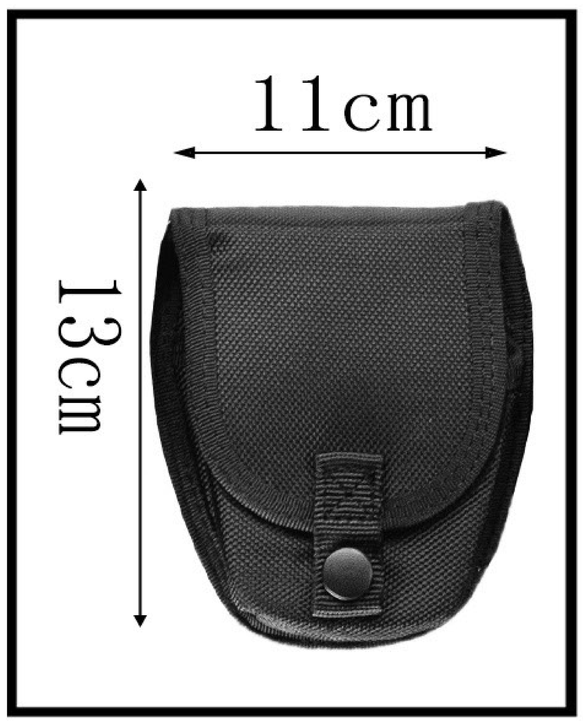

Hand K bag 8001-6

Old standard eight-piece multi-function belt

Army Green/Black/White Optional

Kettle bag 8002-1

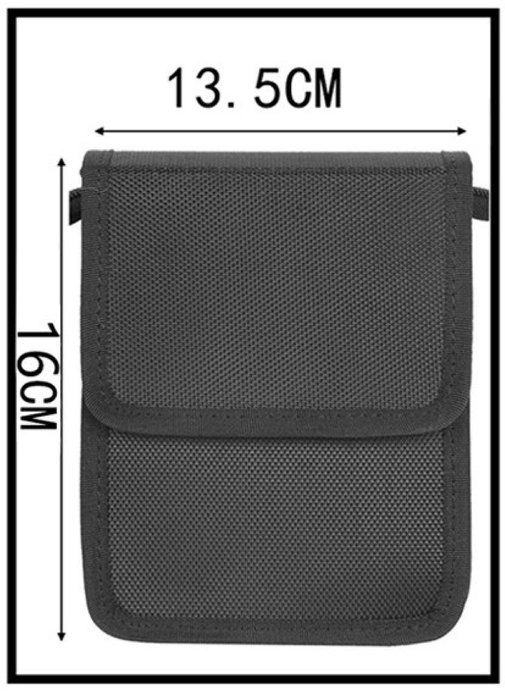

Package 8002-2

Walkie-talkie bag 8002-3

Hand K bag 8002-4

Water spray bag 8002-5

Telescopic stick bag 8002-6

Flashlight bag 8002-7

Hand Q bag 8002-8

Ten-piece multi-function belt

Black/khaki/Army Green/digital camouflage/jungle camouflage/five-color optional

Rope bag 8003-1

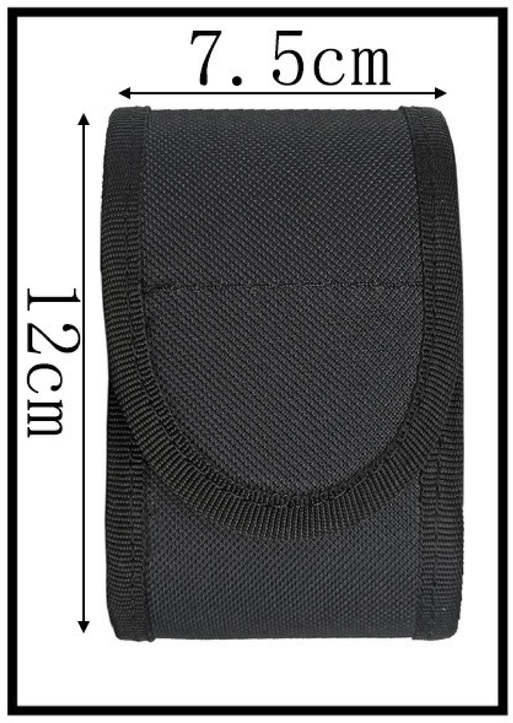

Camera bag 8003-2

Keychain 8003-3

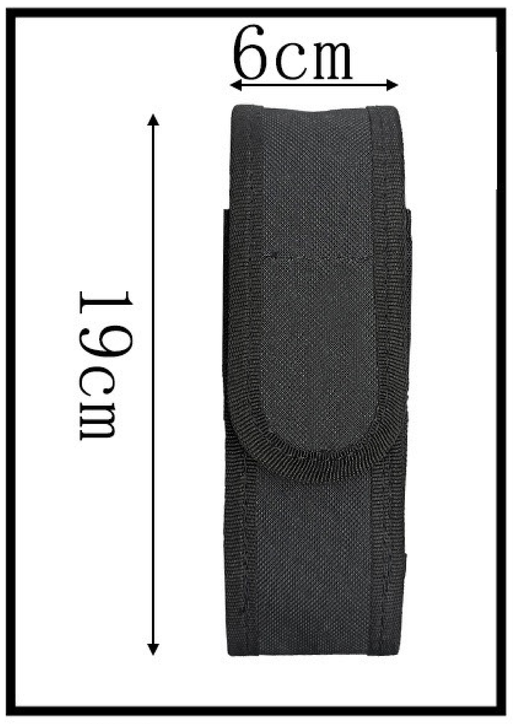

Water spray bag 8003-4

Double clip bag 8003-5

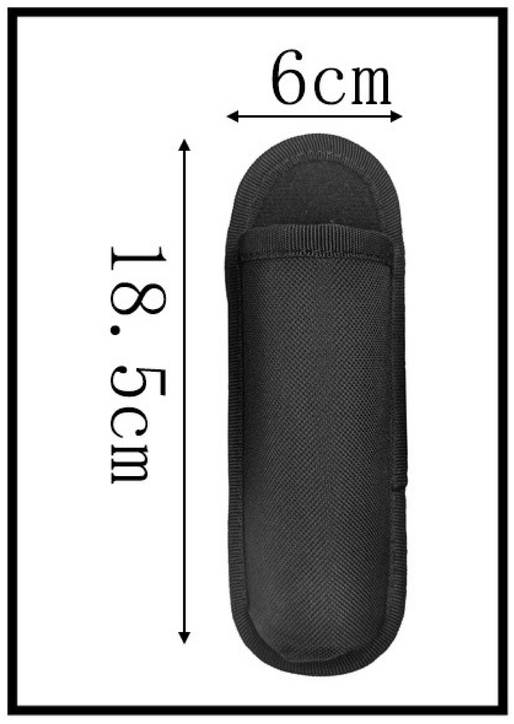

Flashlight bag 8003-6

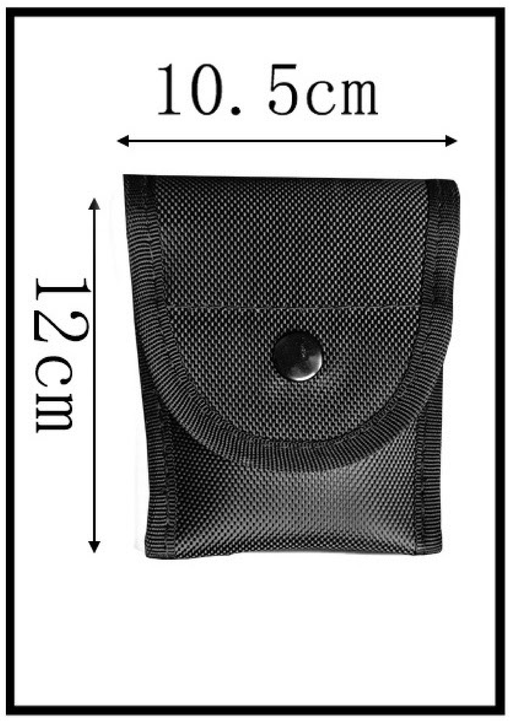

Hand K Bag 8003-7

Hand Q bag 8003-8

C eight-piece multi-functional belt

Keychain 8004-1

Walkie-talkie bag 8004-2

Package 8004-3

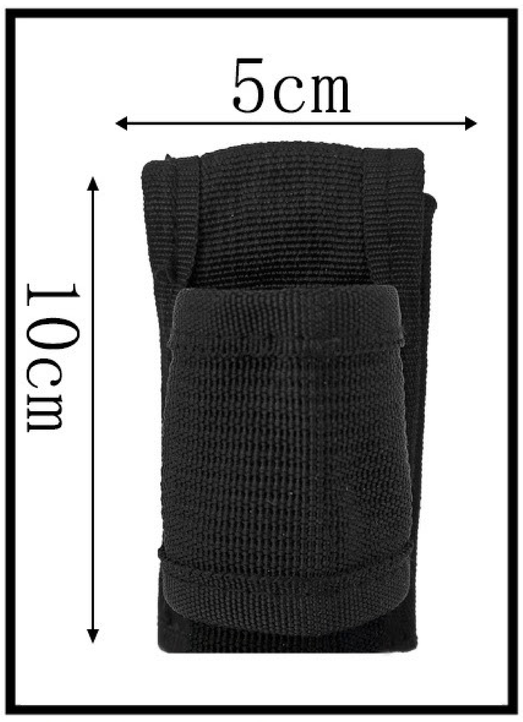

T-shaped stick sleeve 8004-4

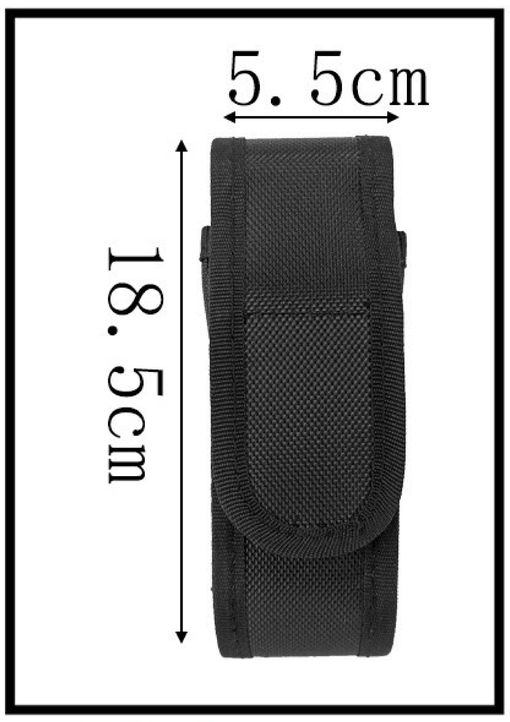

Water spray bag 8004-5

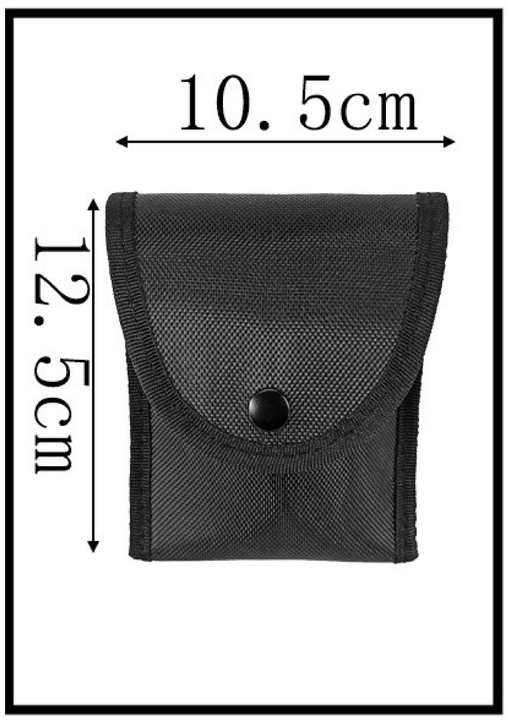

Hand K bag 8004-6

Hand Q bag 8004-7

Seven-piece multi-function belt

Walkie-talkie bag 8005-1

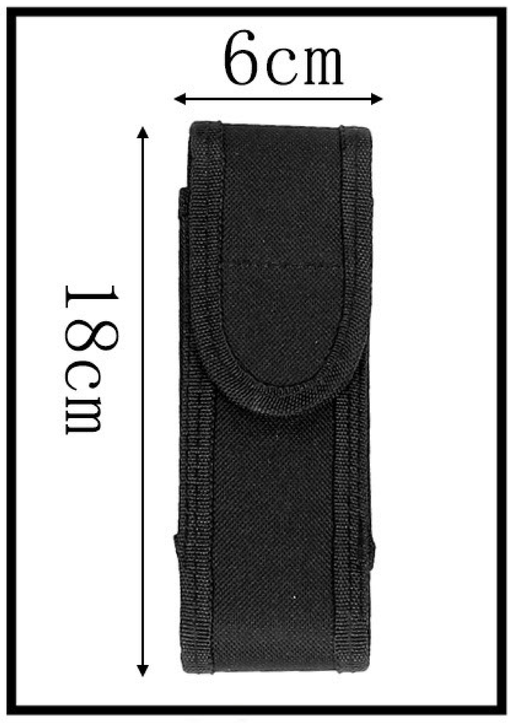

Water spray bag 8005-2

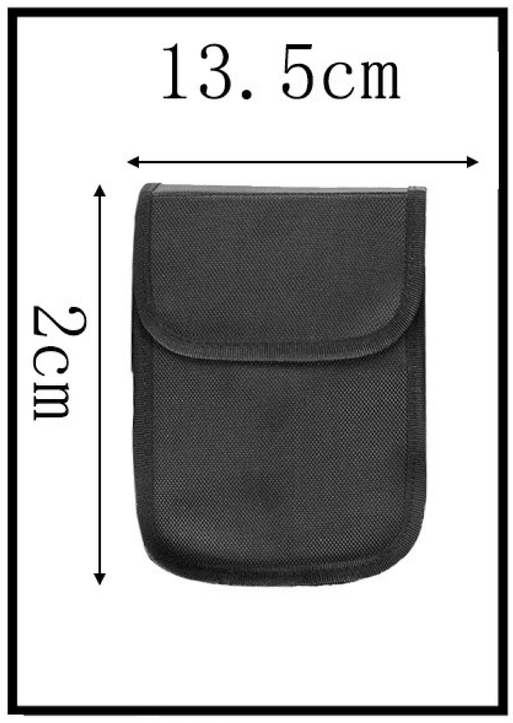

Package 8005-3

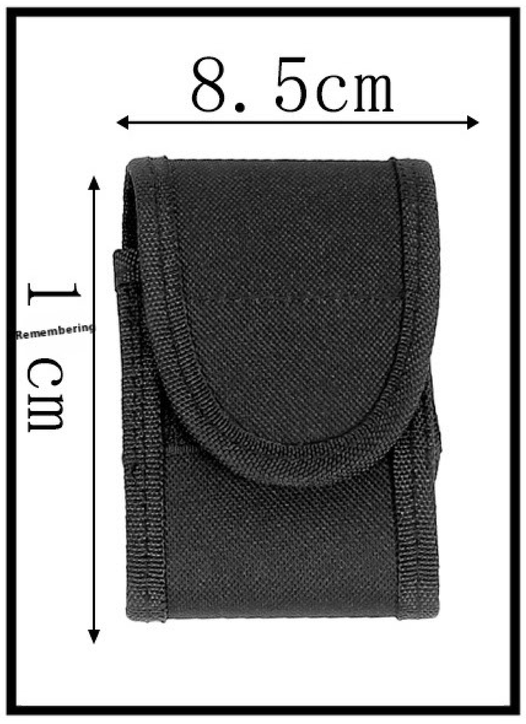

The camera bag 8005-4

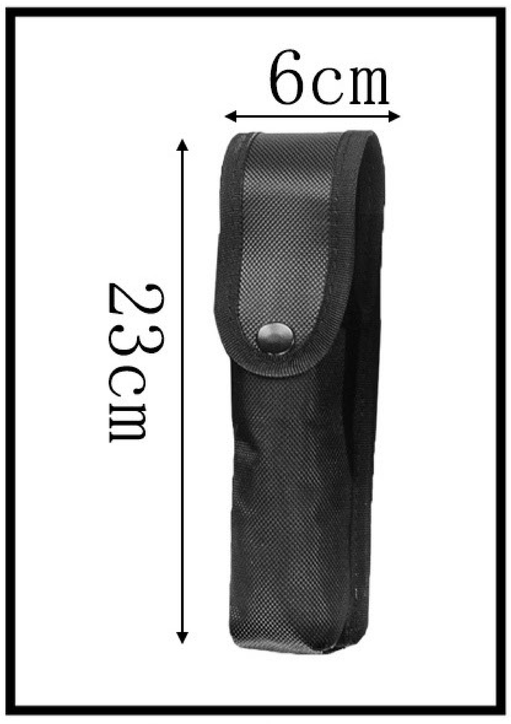

Telescopic stick bag 8005-5

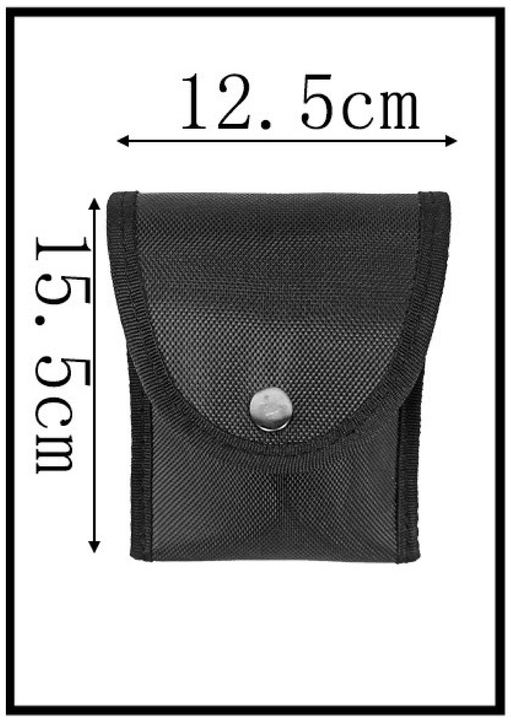

Hand K bag 8005-6

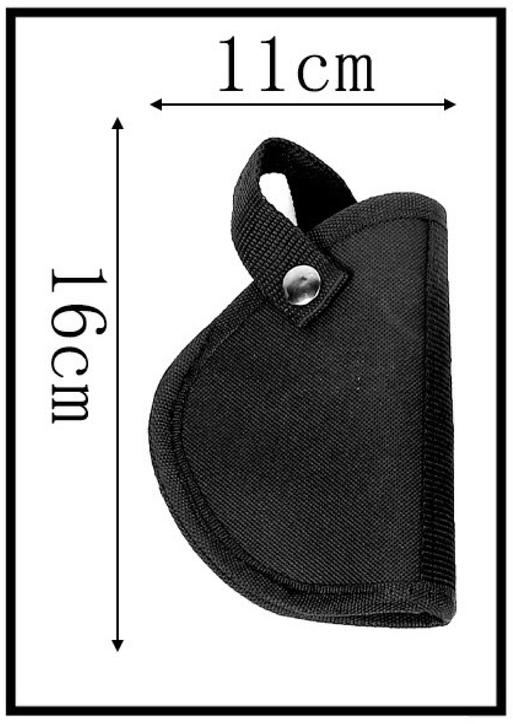

Hand Q bag 8005-7

Five-piece multi-function belt

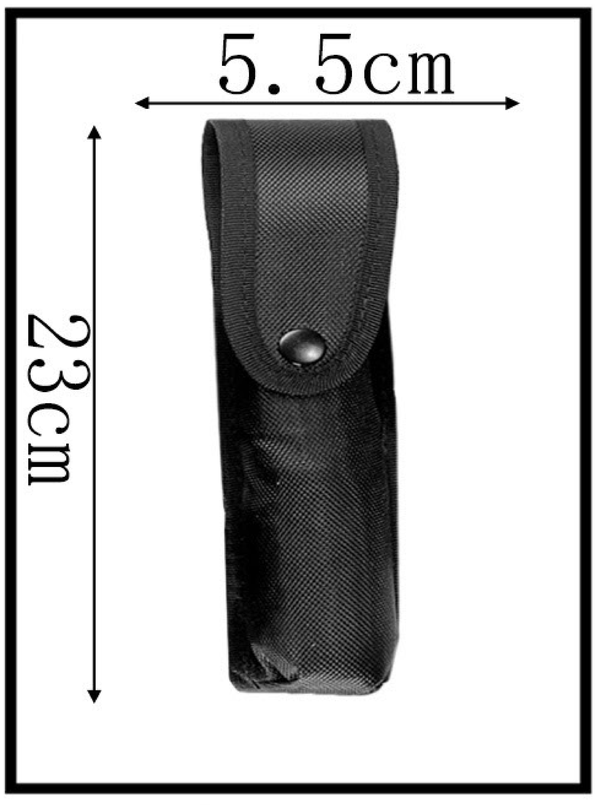

Telescopic stick bag 8006-1

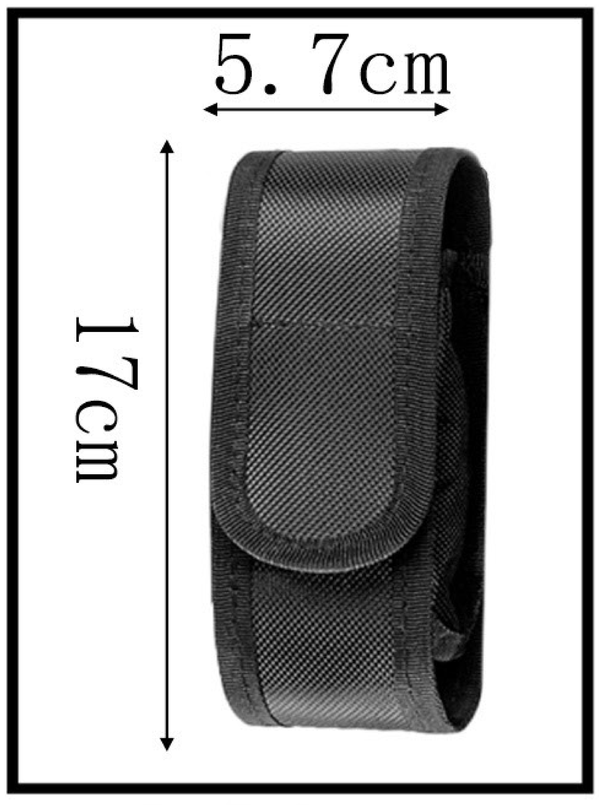

Water spray bag 8006-2

Package 8006-3

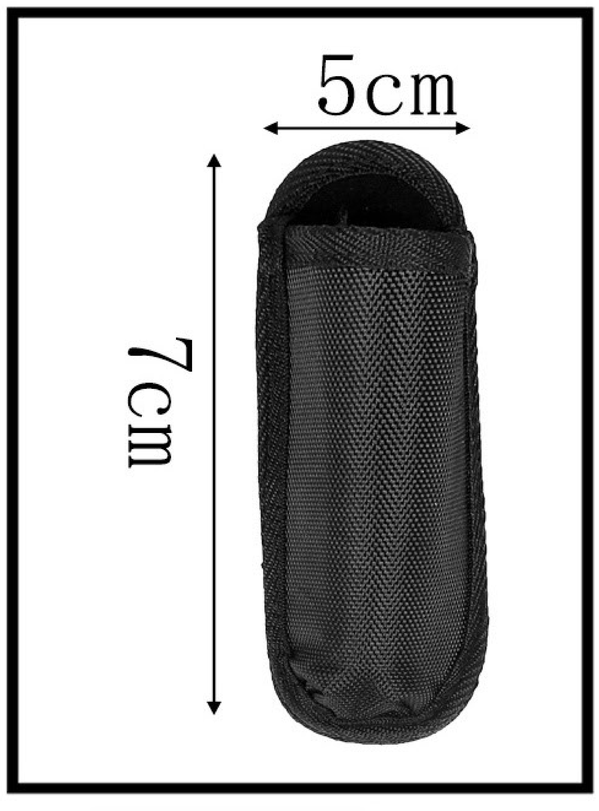

Flashlight bag 8006-4

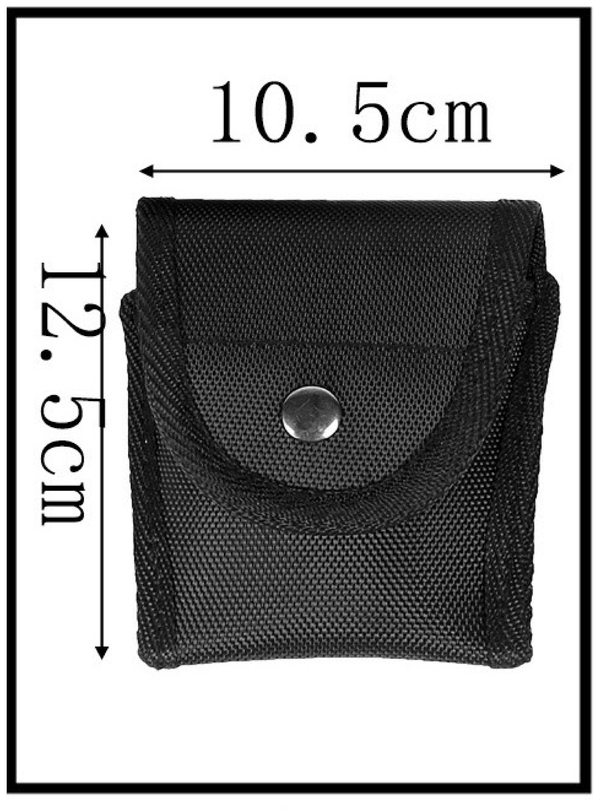

Hand K bag 8006-5

Stereotype multi-function belt

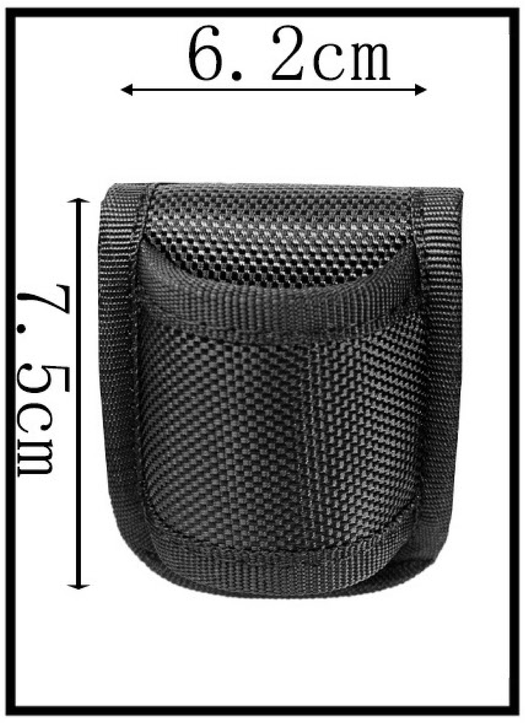

Flashlight bag 8007-1

Glover bag 8007-2

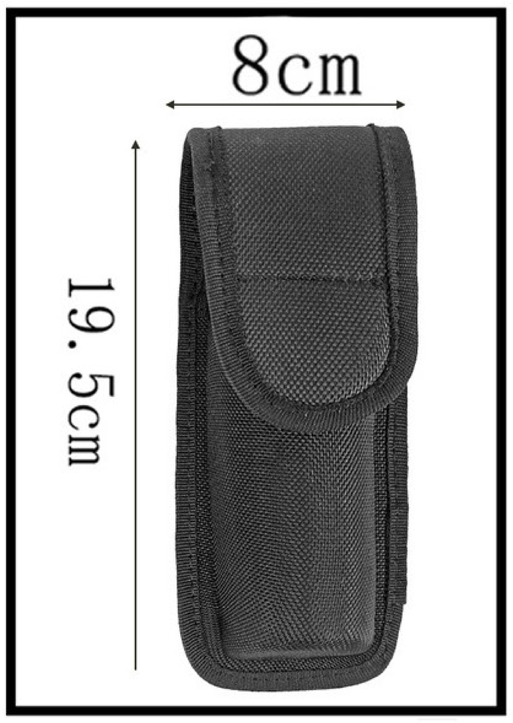

MK4 Spray Pack 8007-3

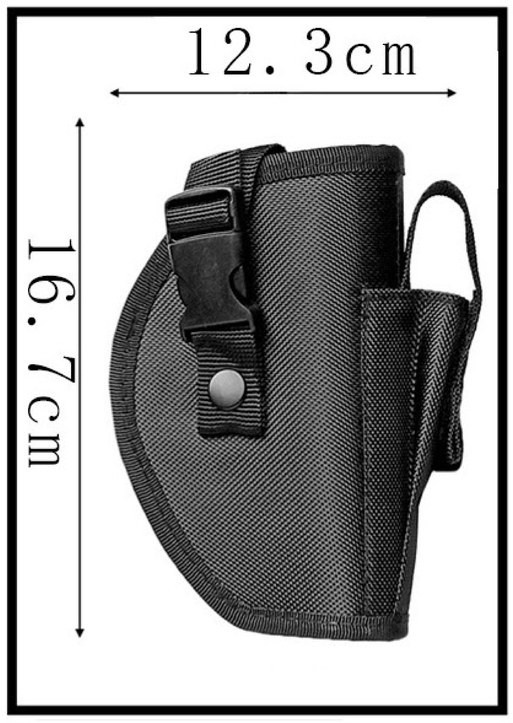

Buckle Q Pack 8007-4

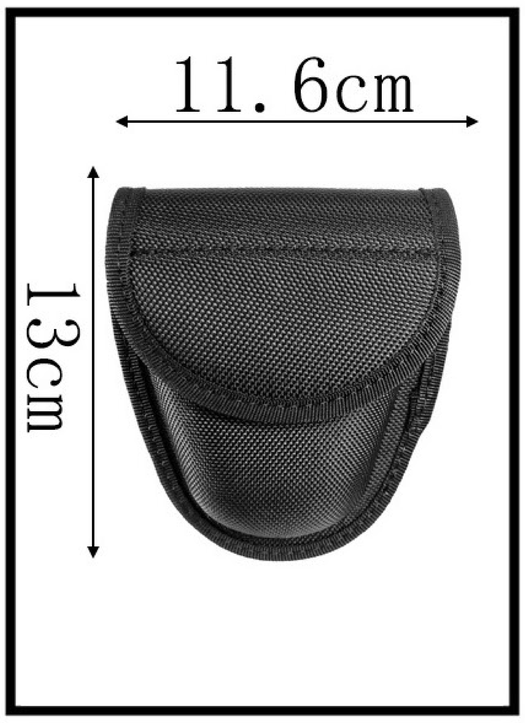

Hand K bag 8007-5

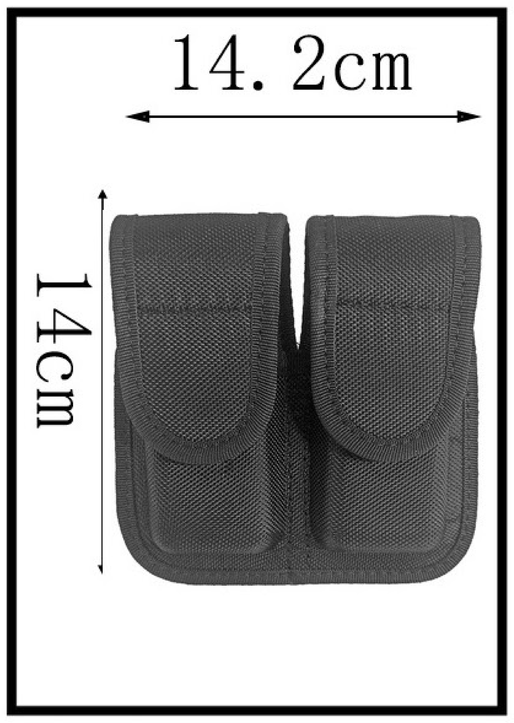

Double clip bag 8007-6

Key sleeve 8007-7

Walkie-talkie bag 8007-8

Foreign trade six-piece multi-functional belt

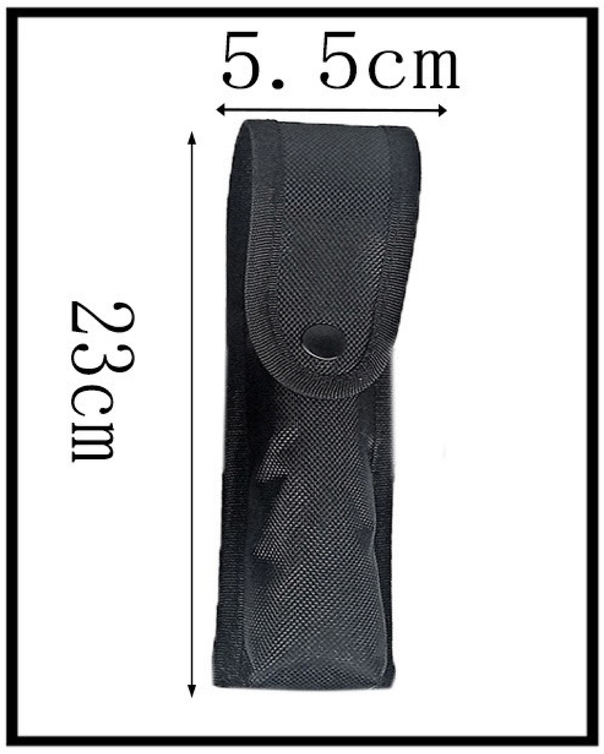

Telescopic stick bag 8008-1

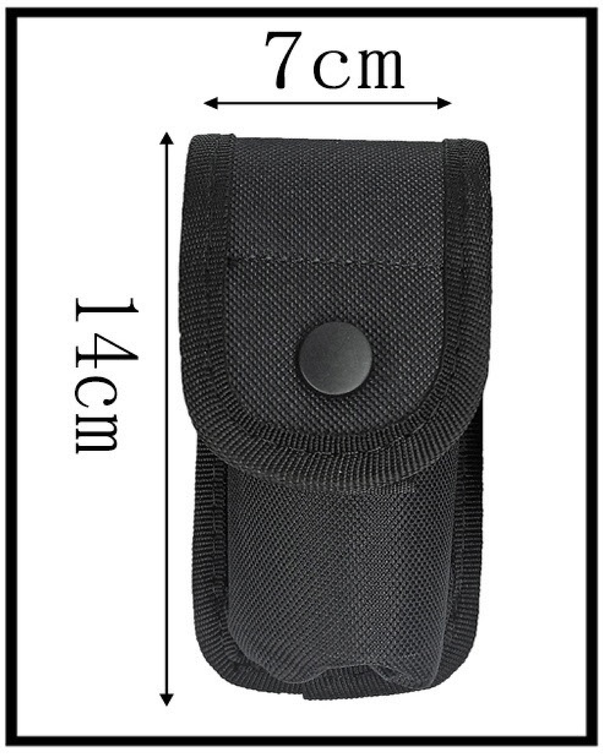

Rope bag 8008-2

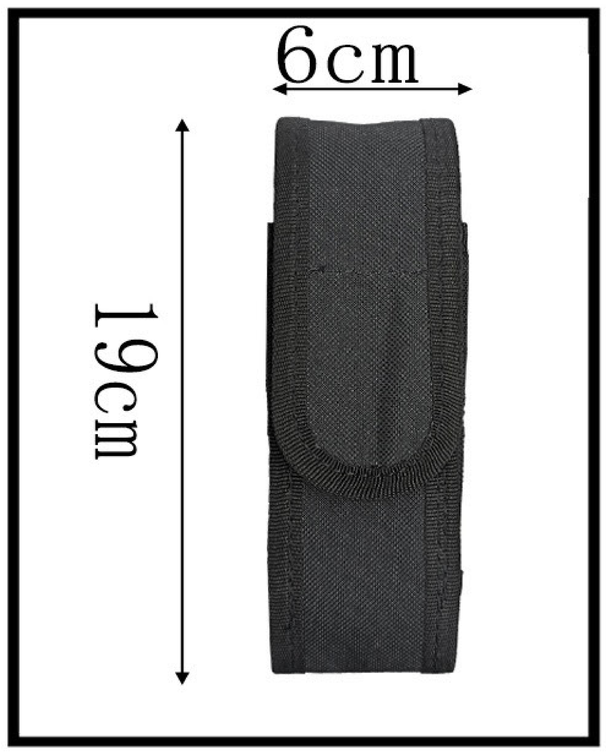

Water spray bag 8008-3

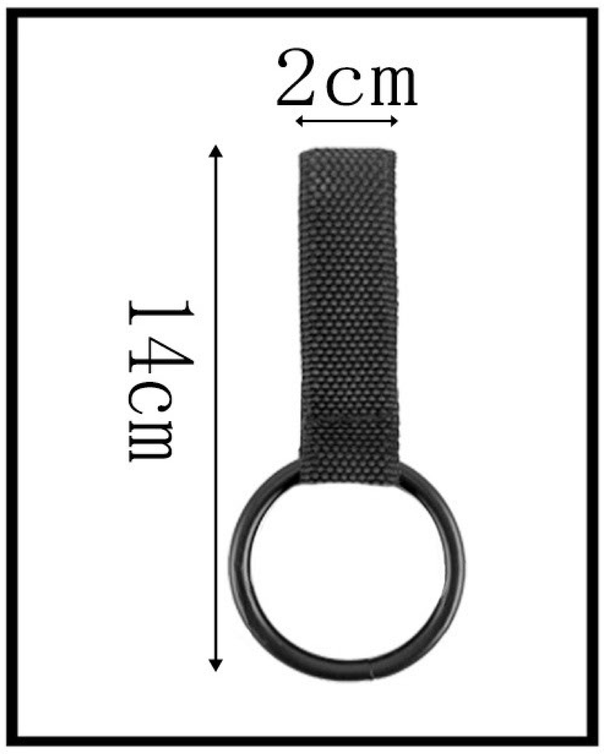

Ring T-stick belt 8008-4

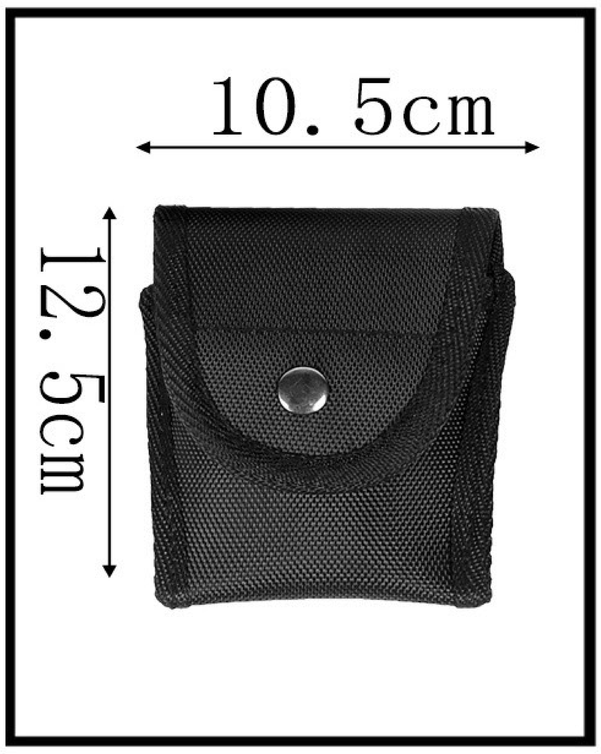

Hand K bag 8008-5

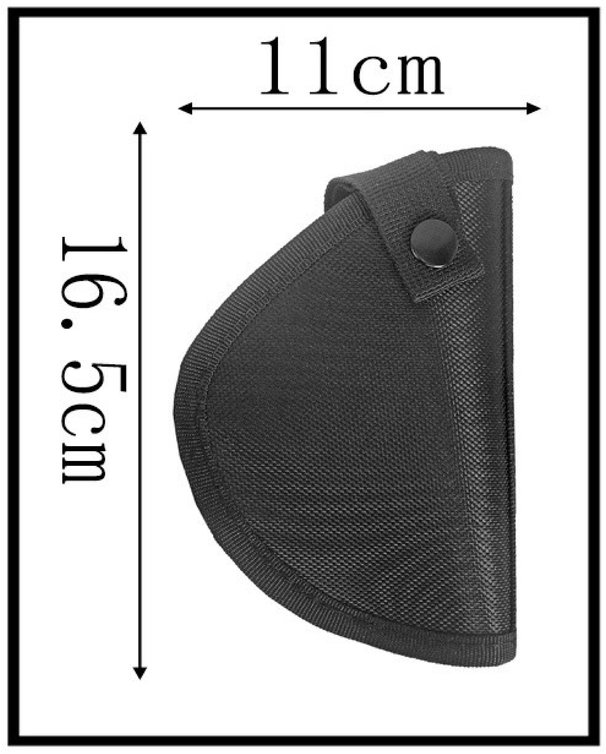

Hand Q bag 8008-6

Product number: 8009

Hong Kong eight-piece multi-function belt

Black/Fluorescent Green Optional

Hand K bag 8009-1

Package 8 8009-2

Dagger Pack 8009-3

Water spray bag 8009-4

Walkie-talkie bag 8009-5

Telescopic stick bag 8009-6

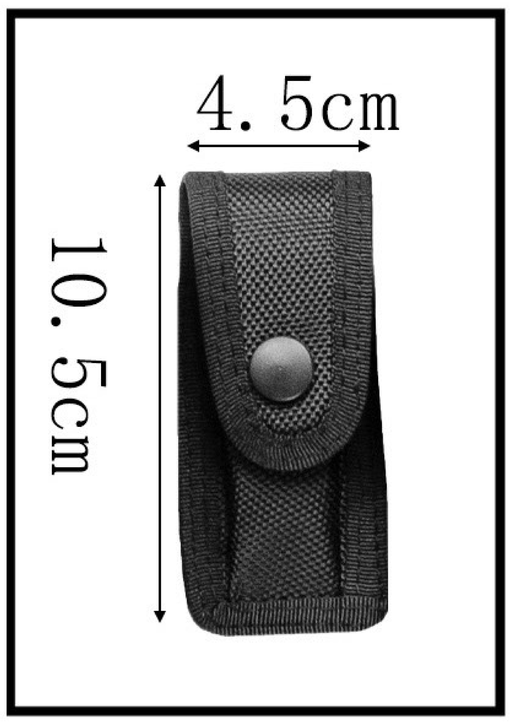

Clip Bag 8009-7

Hand Q bag 8009-8

Plastic-steel combination multi-functional belt

Package

8010-1

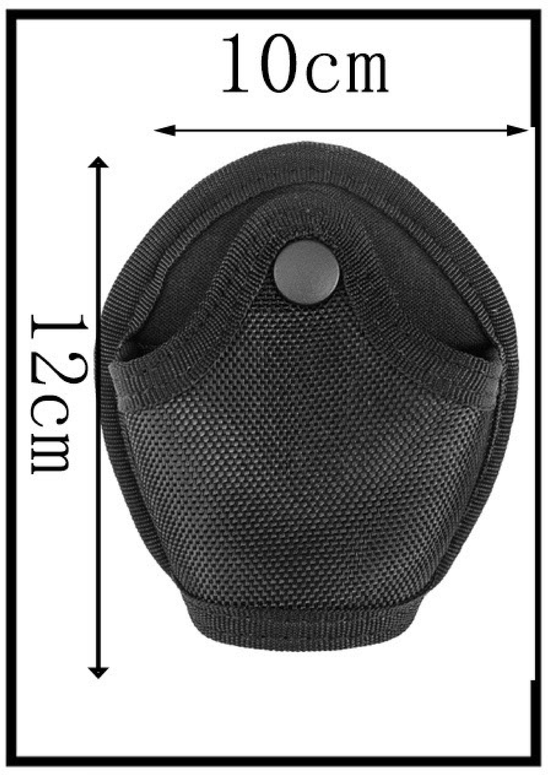

Quick pull K bag

8010-2

Pull out the kettle bag

8010-3

Walkie-talkie bag

8010-4

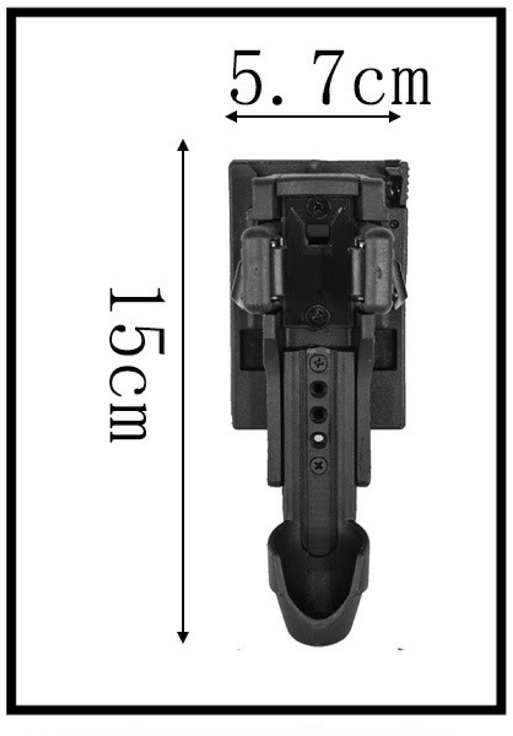

Side-opening stick sleeve

8010-5

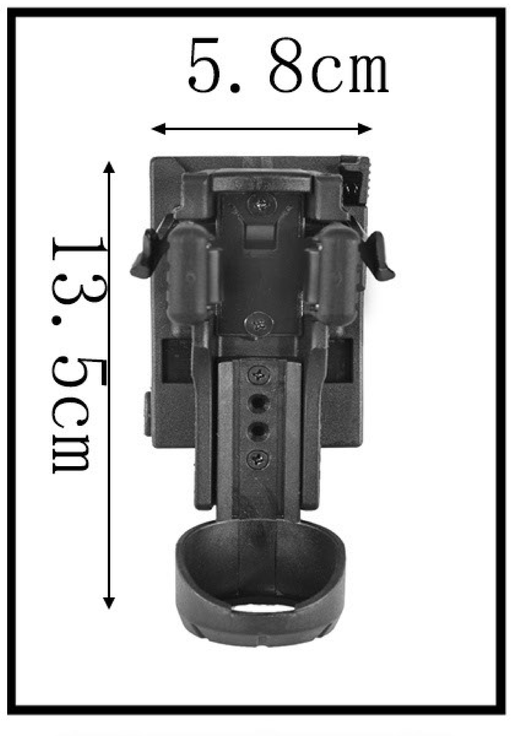

Side opening spray sleeve

8010-6

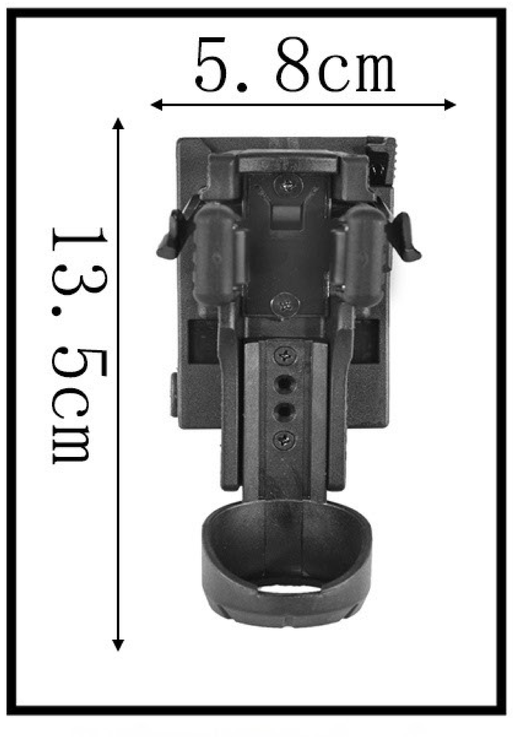

Side-opening flashlight cover

8010-7

Tactical inner belt in stock series

YKK Belt 8011

511 alloy buckle belt 8012

Cobra Belt 8013

Flip Cobra Belt 8014

Bullet Belt 8015

8016

511 alloy buckle belt 8017

4.2 nylon Japanese buckle belt 8018

8019

8020

8021

8022

8023

3.5 alloy buckle nylon inner belt 8024

National Emblem Alloy Buckle Woven Elastic Belt

8025

3.5 Police Nylon Inner Belt

8026

Tactical outer belt in stock series

Airport Security Belt 8027

Pneumatic Eye Belt 8029

5.0 new standard foreign trade belt 8031

Six mesons 8033

S Outer belt 8034

Soft SWAT belt 8028

Soft security belt 8030

Three-line belt 8032

E V A **Belt** 8035

Belt with holes in cloth 8036

Cobra Belt Waist Seal 8037

4.5 webbing hole nylon belt 8038

8039

8040

8042

8041

07 braided outer belt PP thin 8043

07 braided outer belt cotton thick 8044

4.8cm Big Bayi Japanese buckle belt 8045

3.3cm small Bayi Japanese buckle outer belt 8046

07 braided inner belt 8047

3.3cm small Bayi inner belt 8048

A security belt 8049

A security belt 8050

B security belt 8051

B security belt 8052

C security belt 8053

D security belt 8054

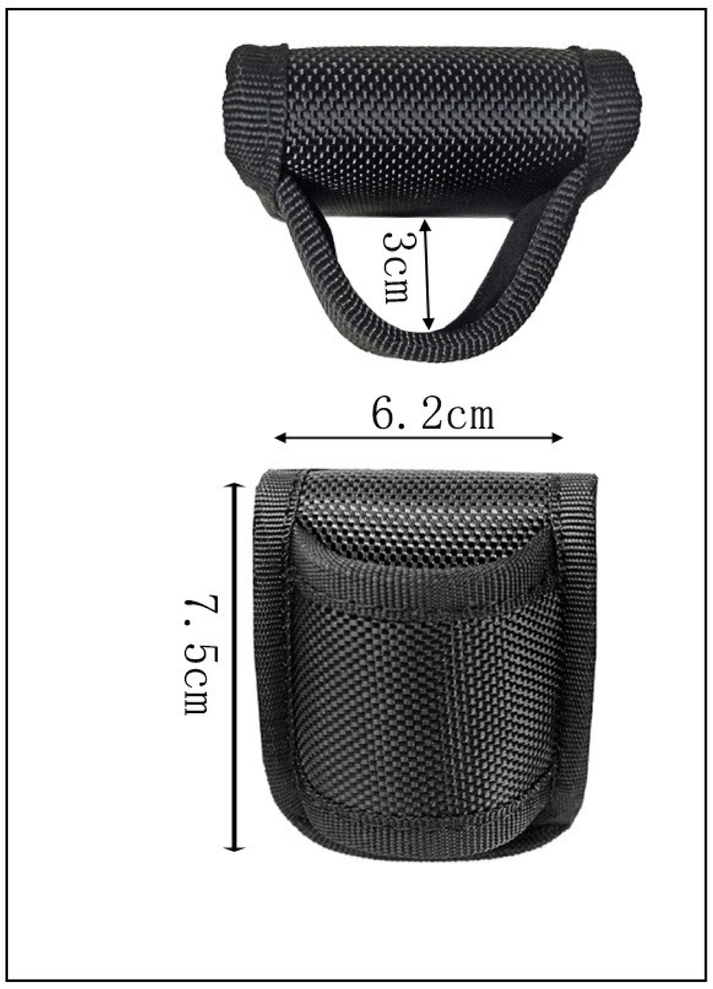

Flashlight cover 8055

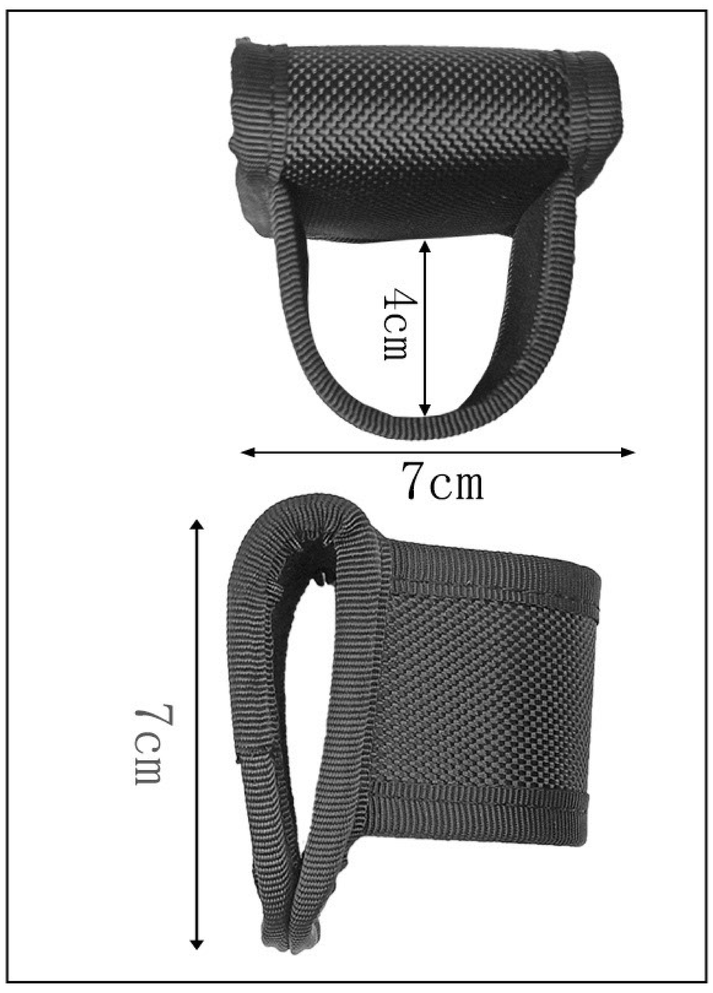

Baton set 8056

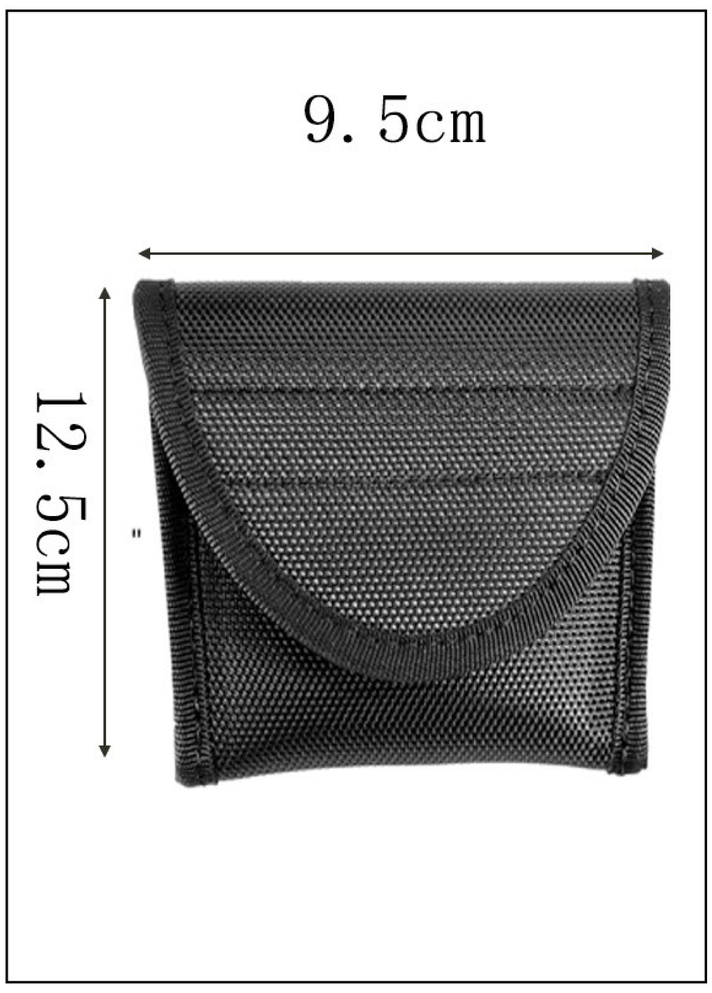

Glover bag 8057

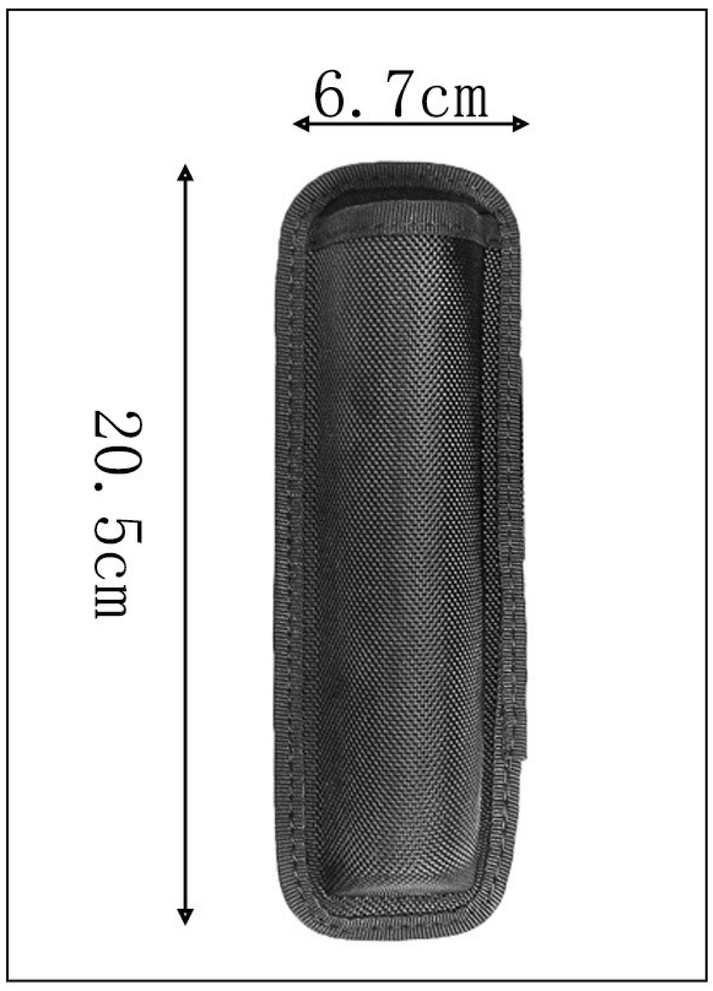

Telescopic stick setting sleeve 8058

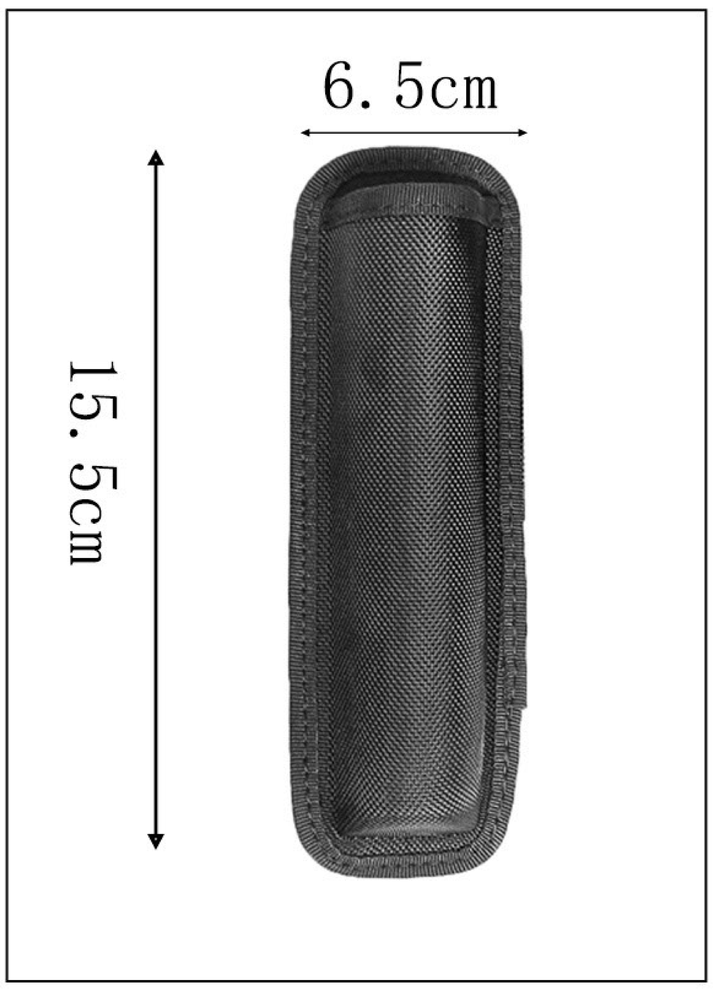

Telescopic stick setting sleeve 8059

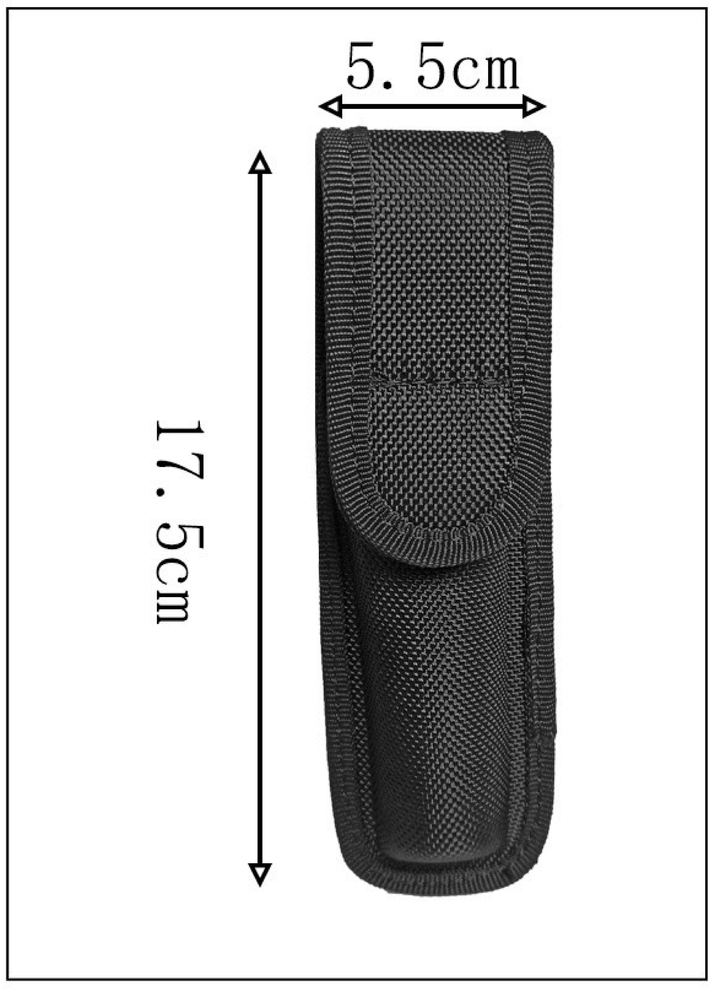

Flashlight bag 8060

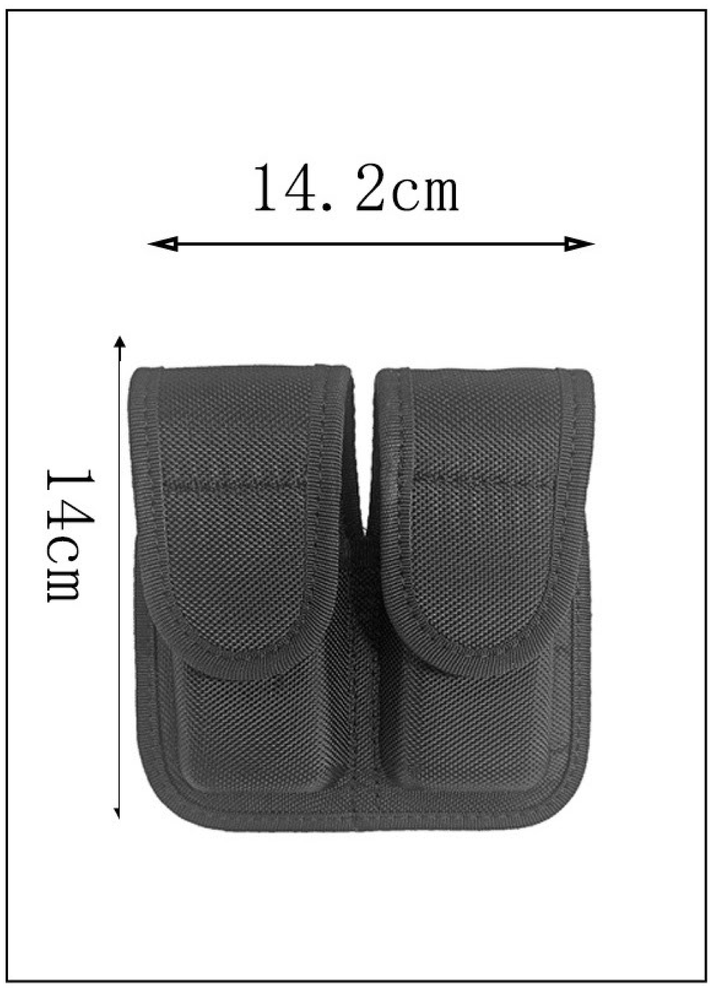

Double clip bag 8061

Double clip bag 8062

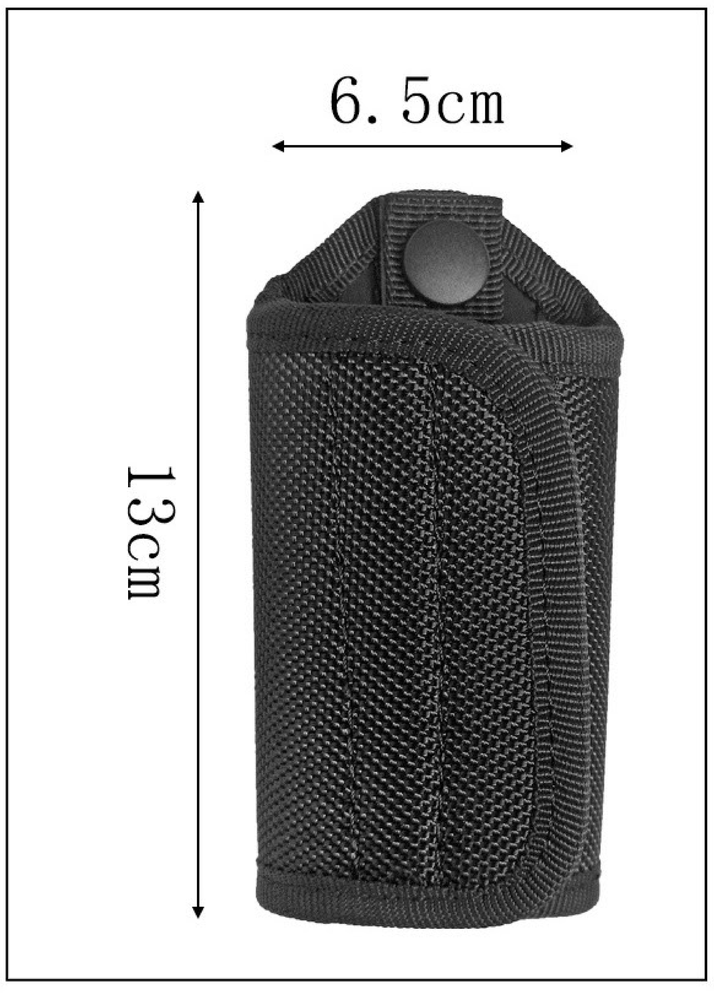

Key sleeve 8063

Rotating intercom bag 8064

Rotating intercom front/back 8065

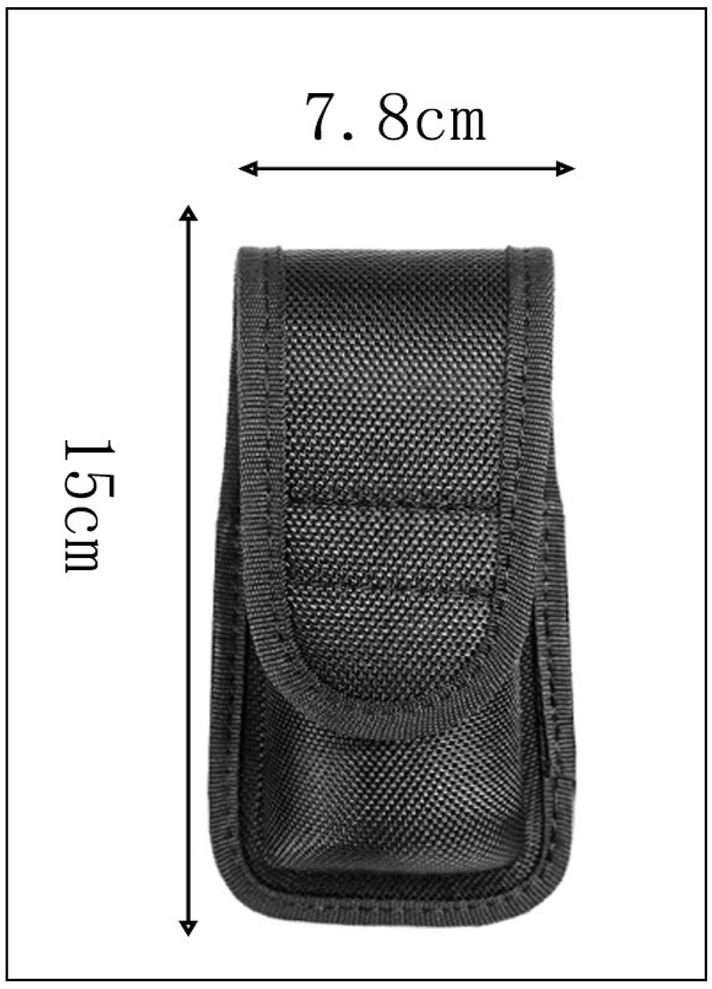

MK3 Spray Pack 8066

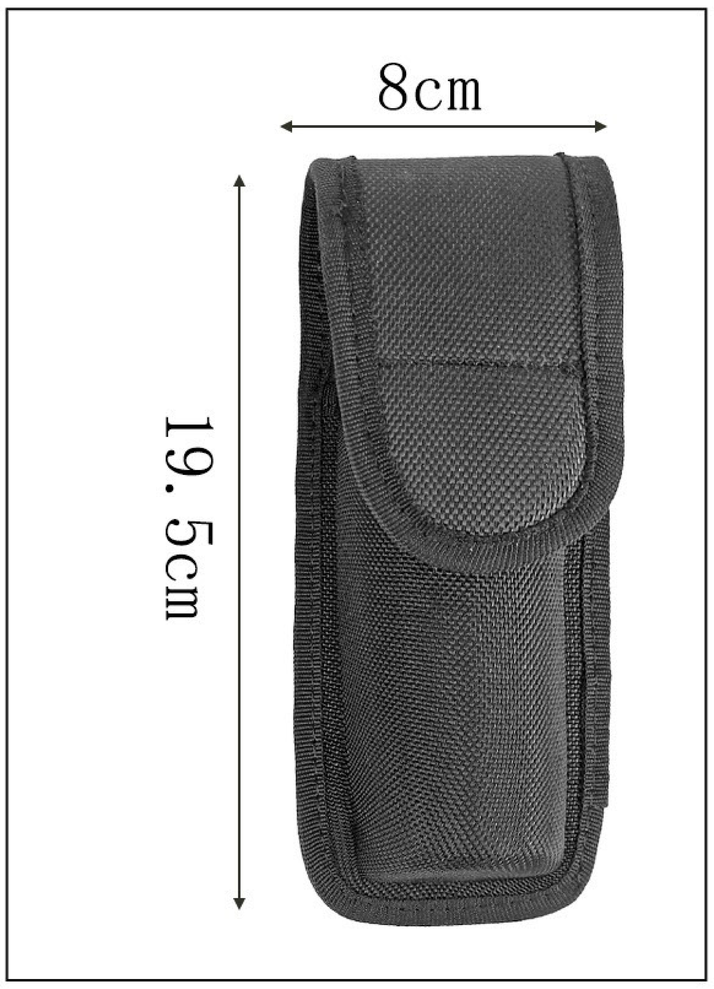

MK4 Spray Pack 8067

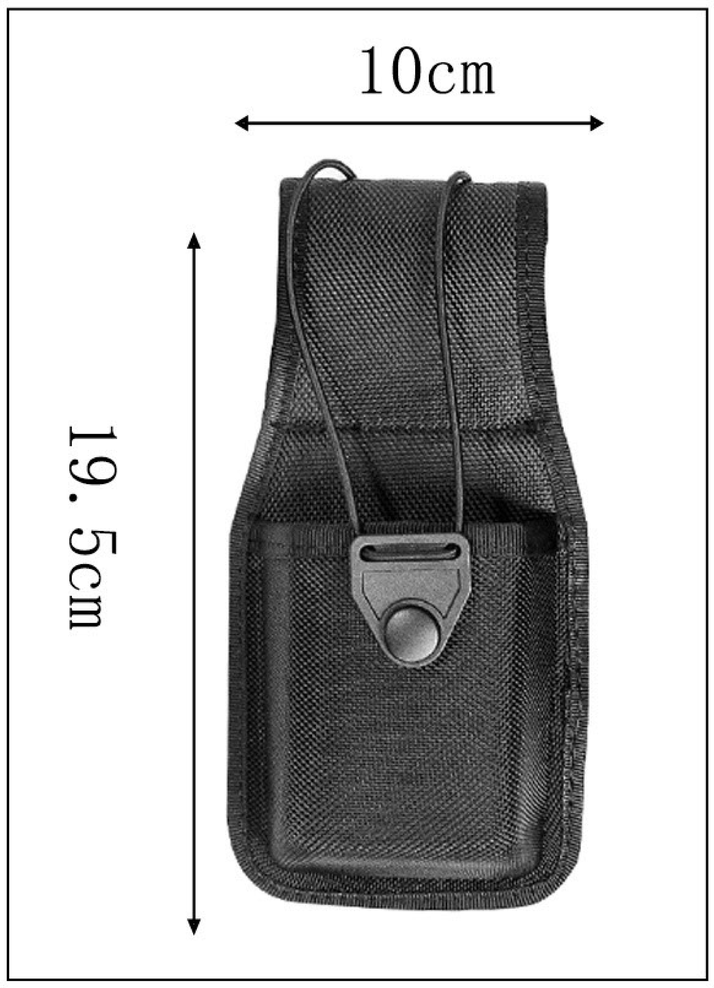

Walkie-talkie bag 8068

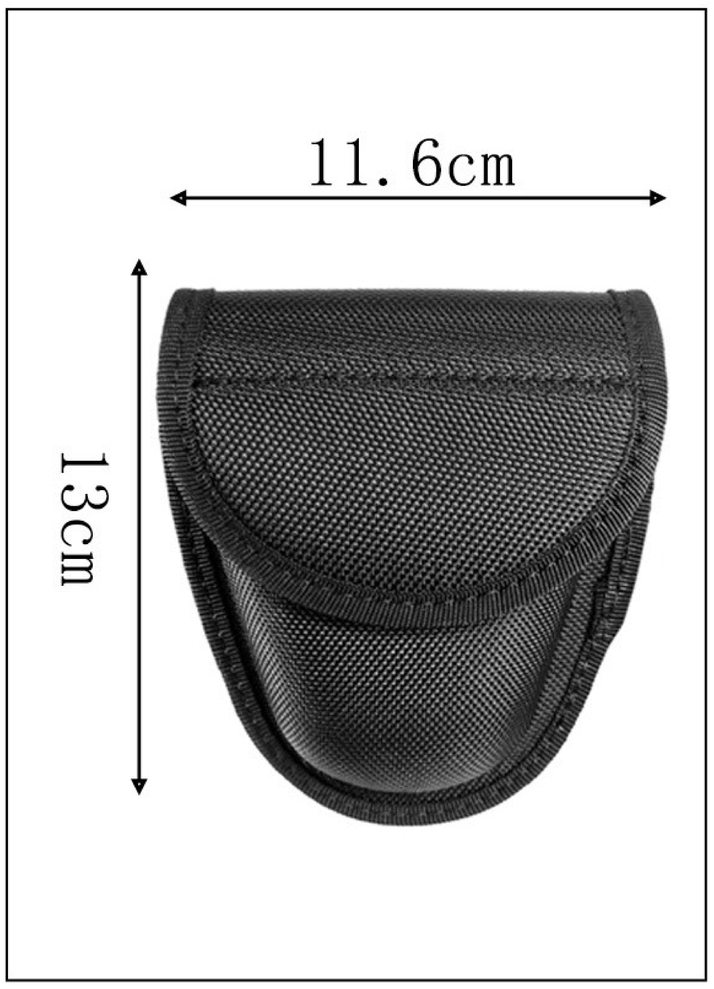

Hand K bag 8069

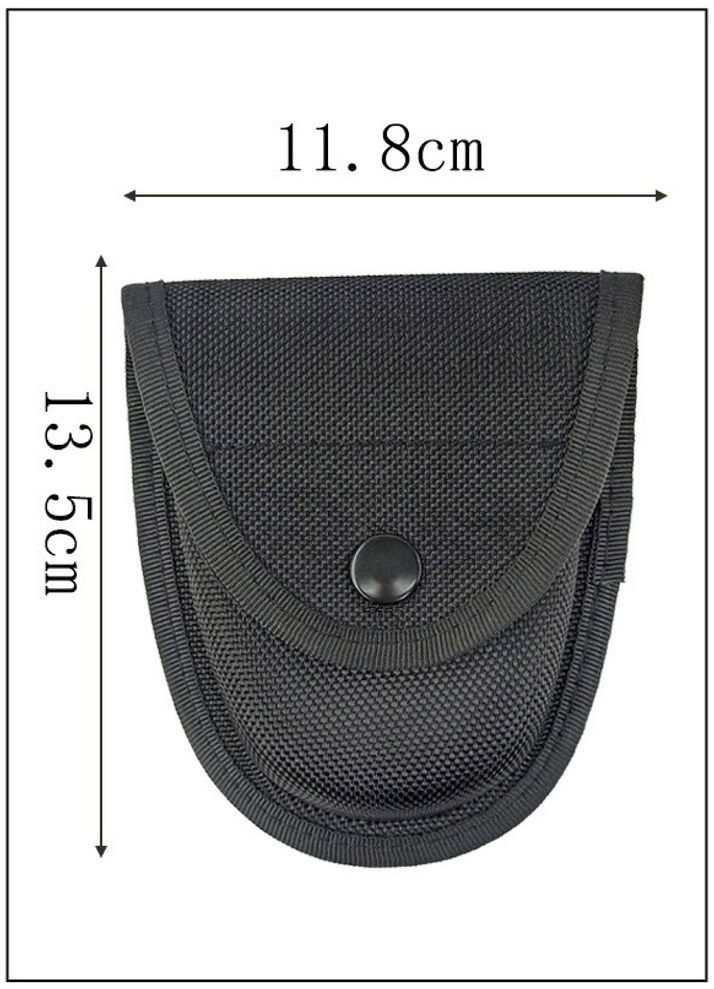

Hand K bag 8070

Soft Intercom Bag 8071

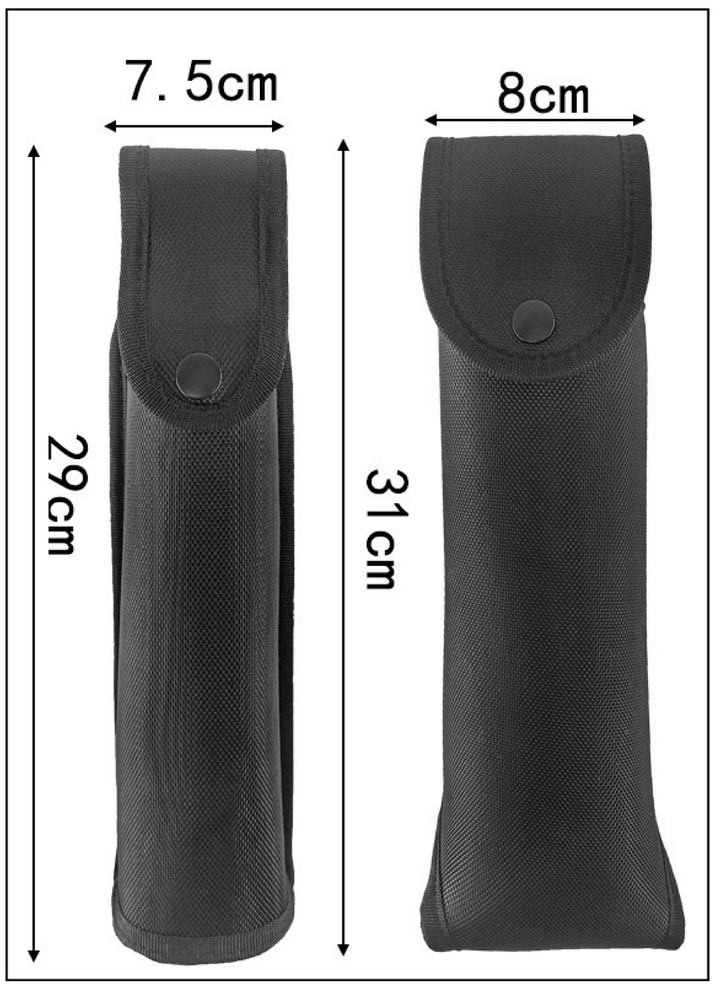

Small fire extinguisher package/large fire extinguisher package 8072

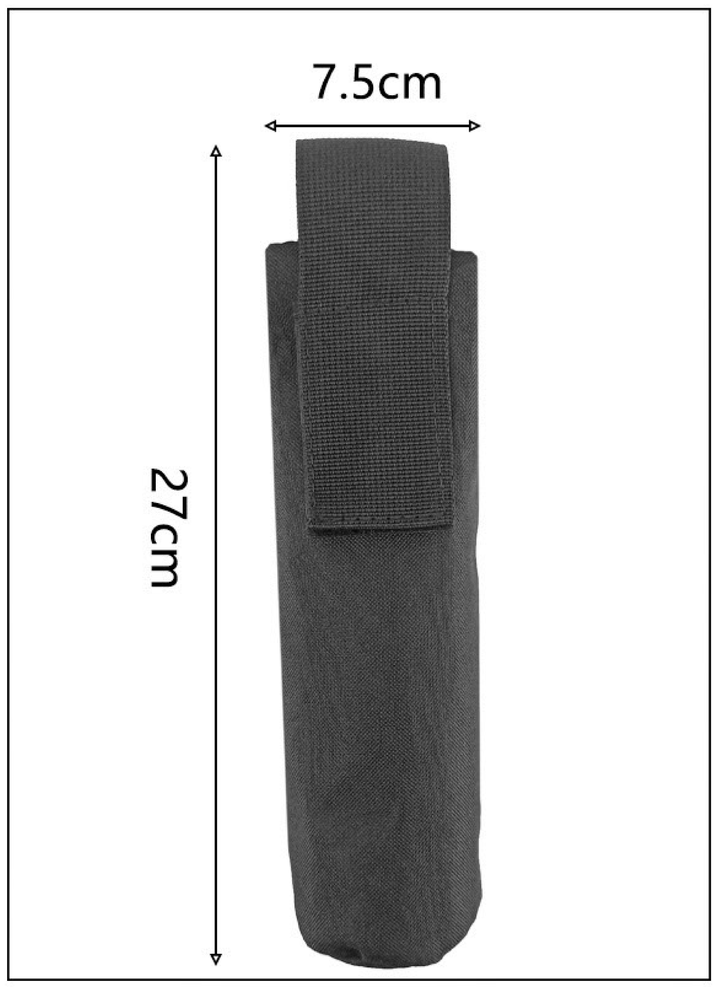

Soft fire extinguisher package 8073

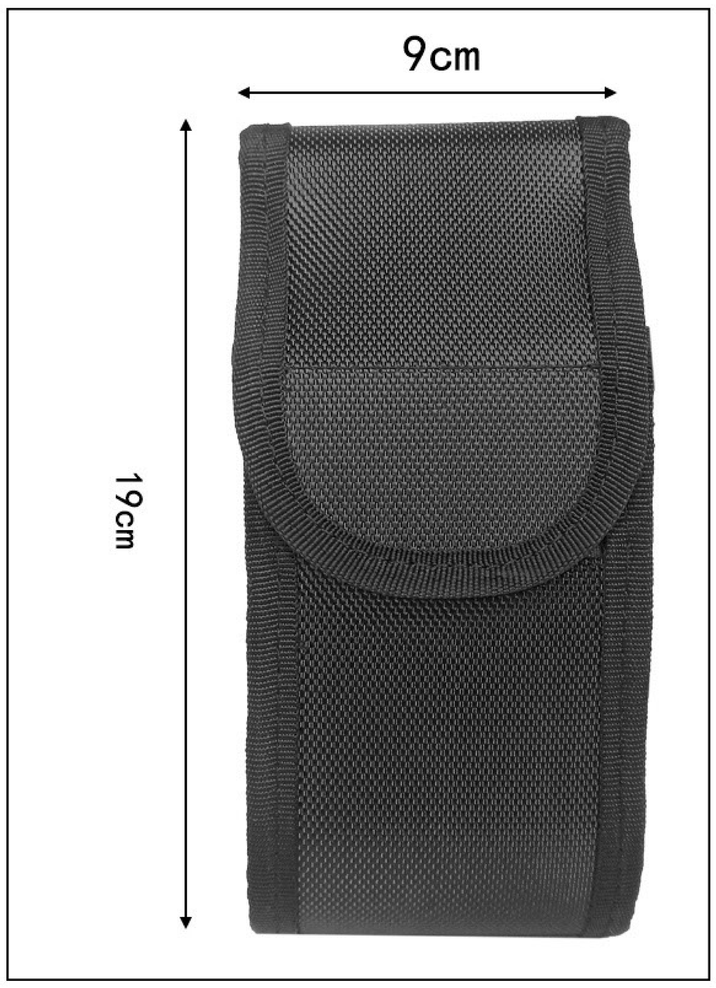

Police Communication Package 8074

Pull out the kettle bag 8075

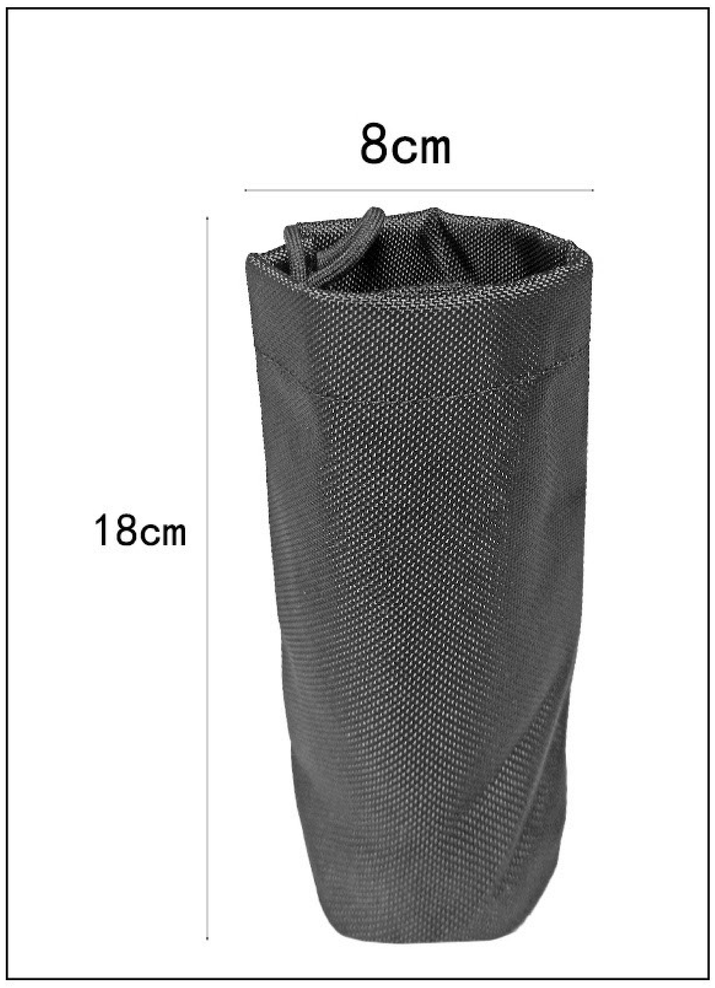

Soft kettle bag 8076

Hard water bottle bag 8077

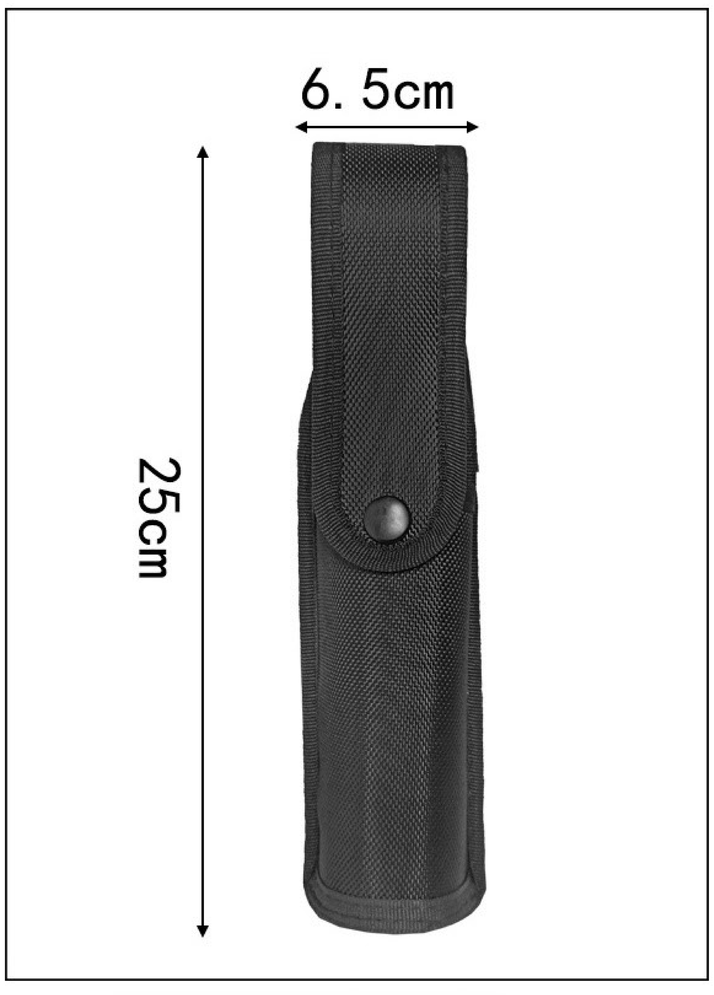

26 inch retractable stick bag 8078

Buckle gun bag 8079

Gun holster leg bag 8080

Ribbon T-shaped stick cover black/white 8081

Knee pads 8082

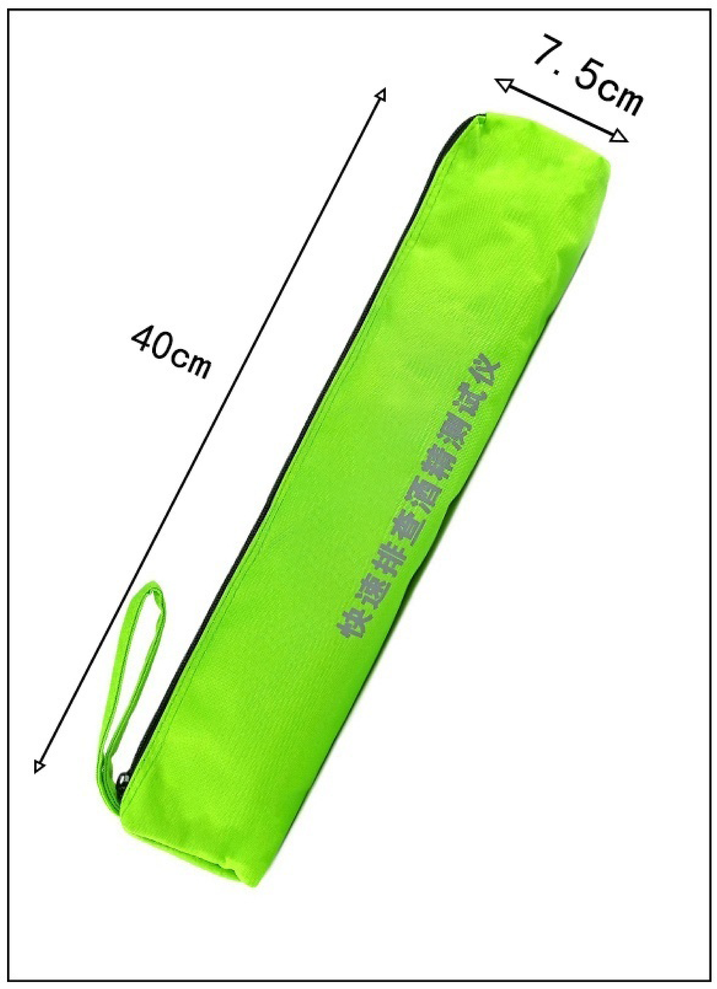

Alcohol detector package 8083

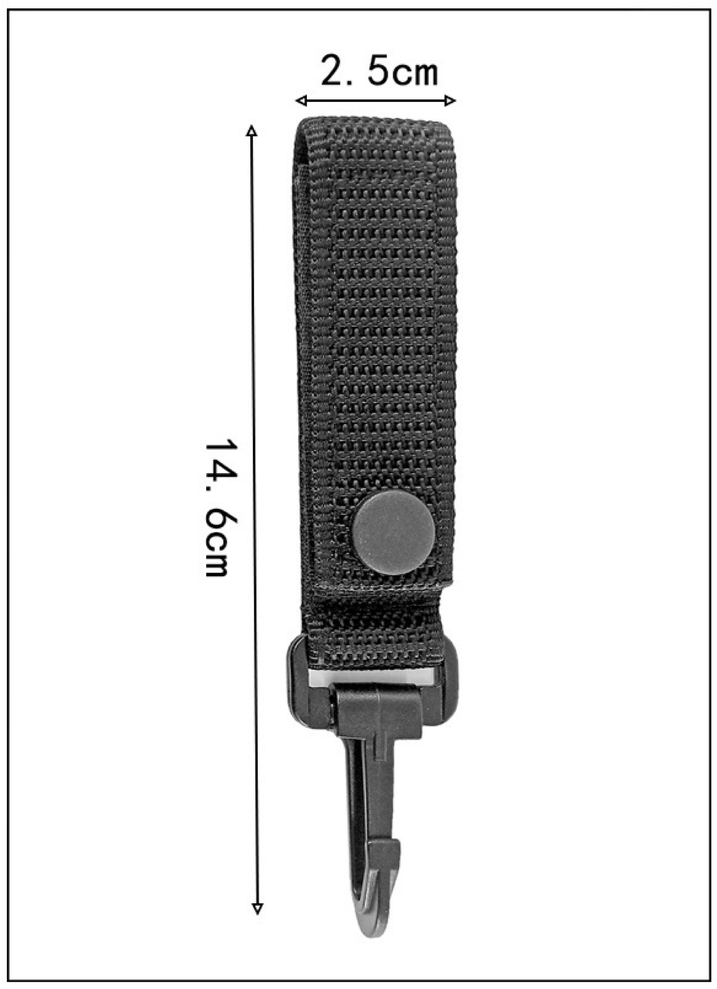

Hook 8084

Torus T-sleeve 8085

8086

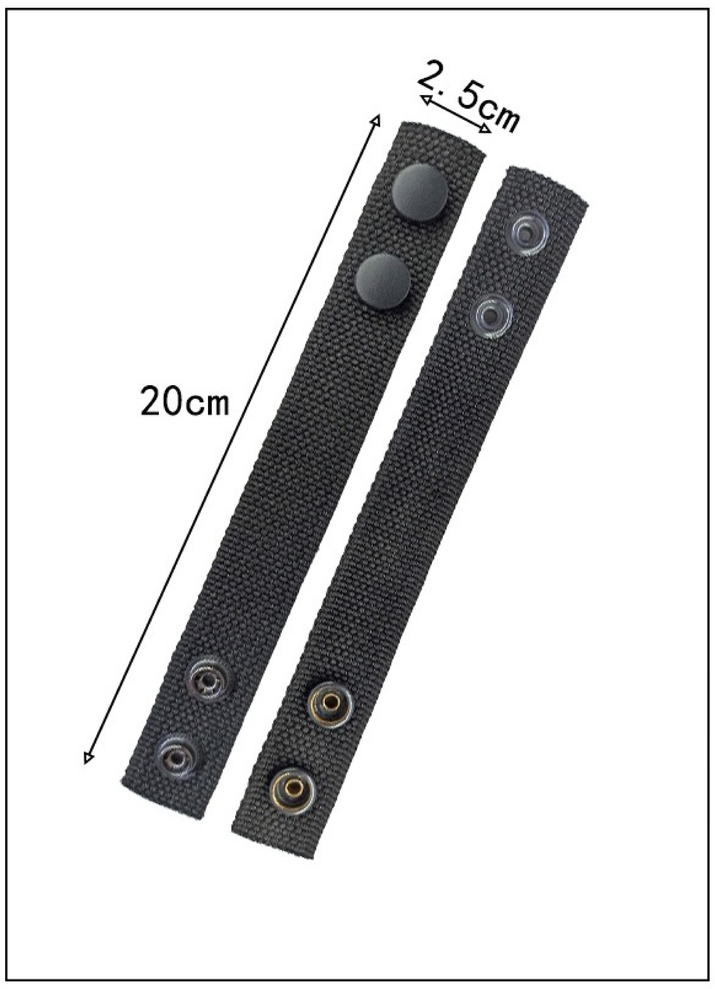

8087

New standard alloy large buckle

Old standard alloy large buckle

8088

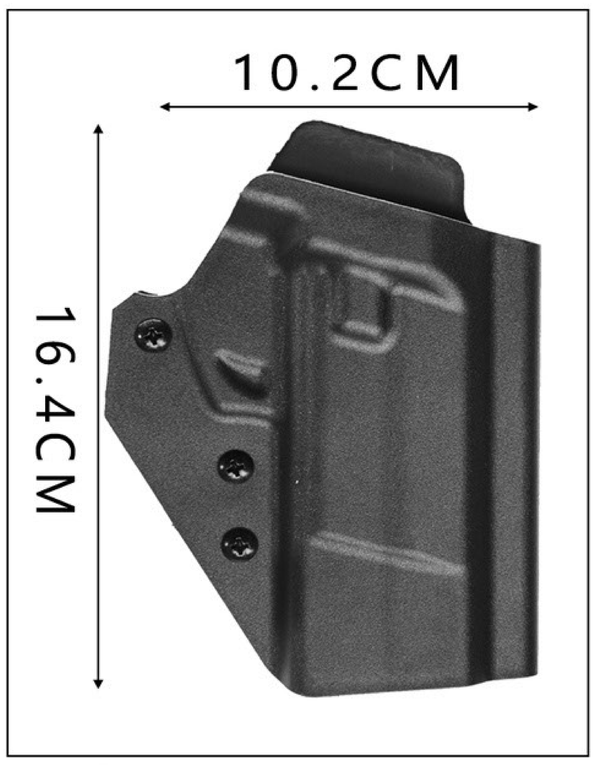

92/92G Pass Competitive Quick Pull Set 8089

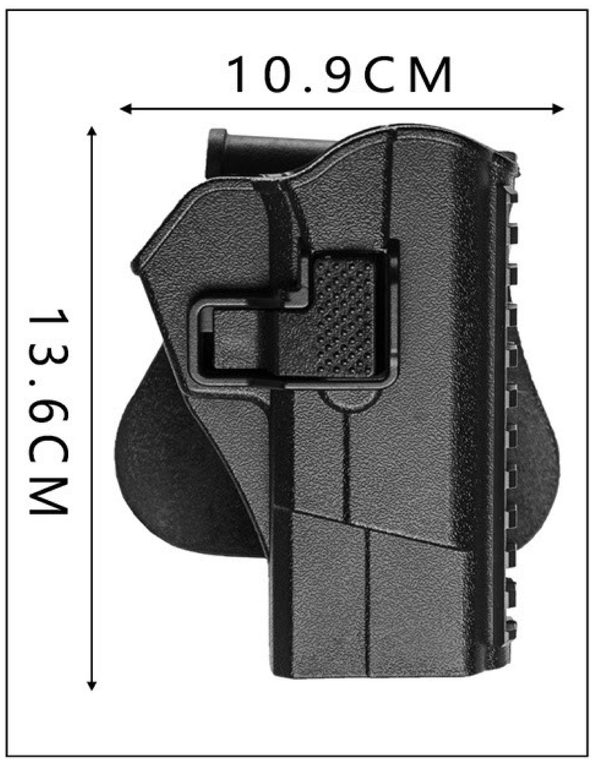

92/92G quick pull sleeve (black and white) 8090

579Q set of 8091

92/92G universal double lock quick pull sleeve 8092

Key hand K set 8093

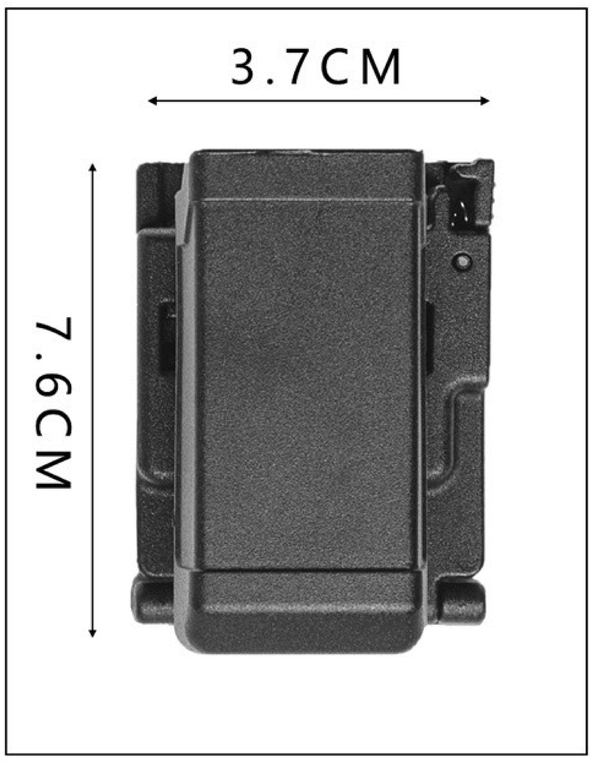

64/77 magazine sleeve 8094

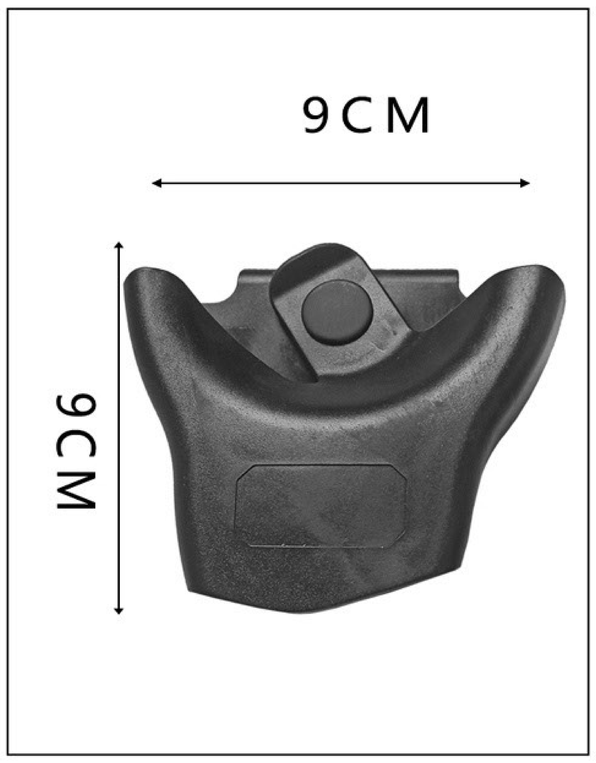

Hand K set (black and white) 8095

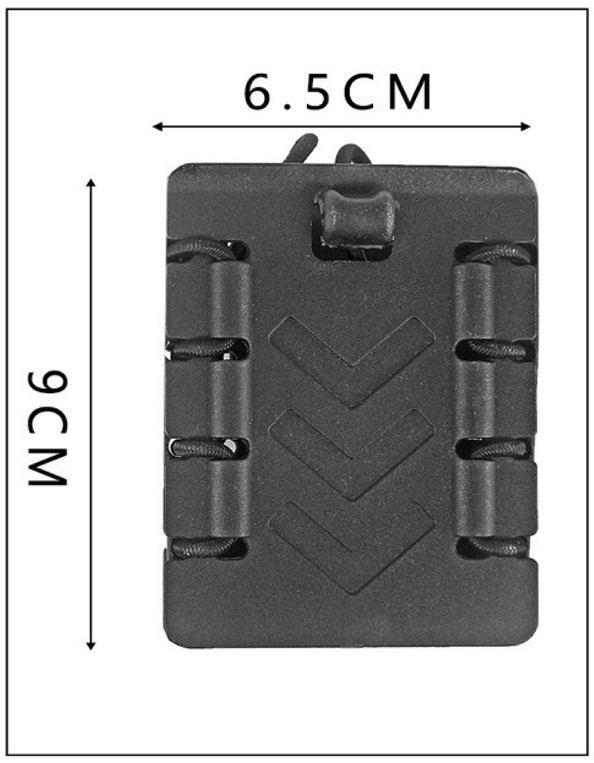

Quick pull intercom set (black and white two colors) 8096

Quick pull K set (black and white two colors) 8097

Foreign trade hand K set 8098

Foreign trade flashlight set 8099

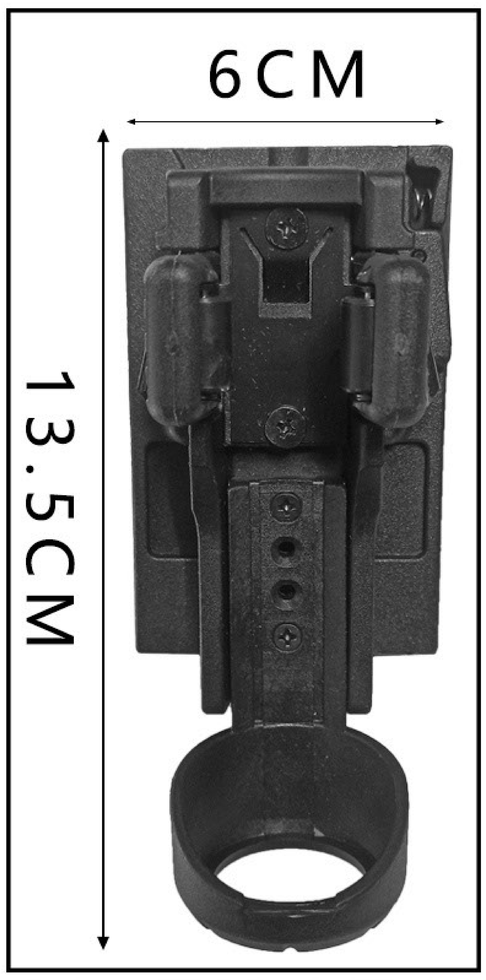

Side opening spray sleeve with lock

((available in black and white) 8100

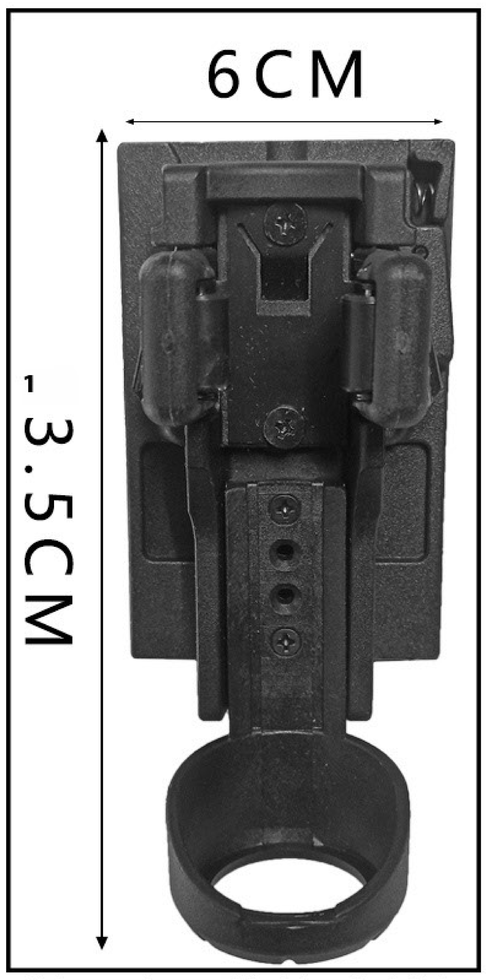

Side opening and locking flashlight cover

(available in black and white) 8101

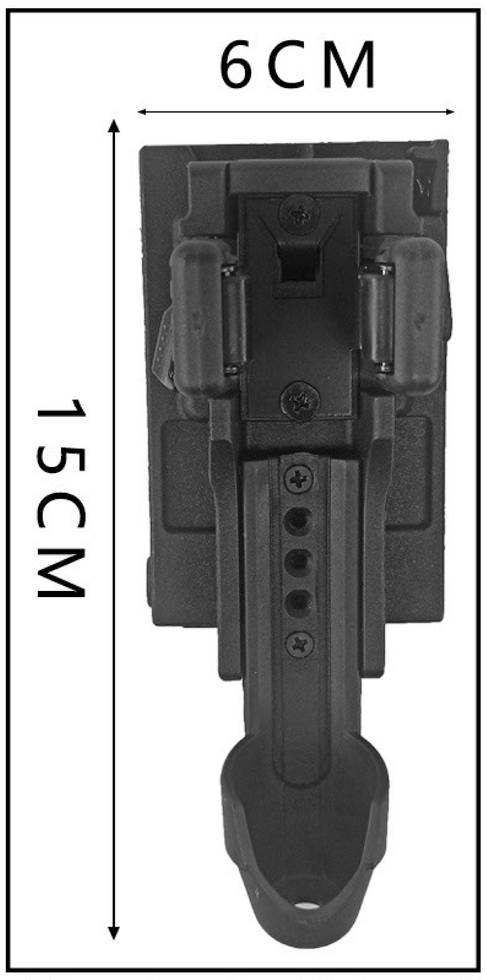

Side-opening swing stick sleeve with lock

(available in black and white) 8102

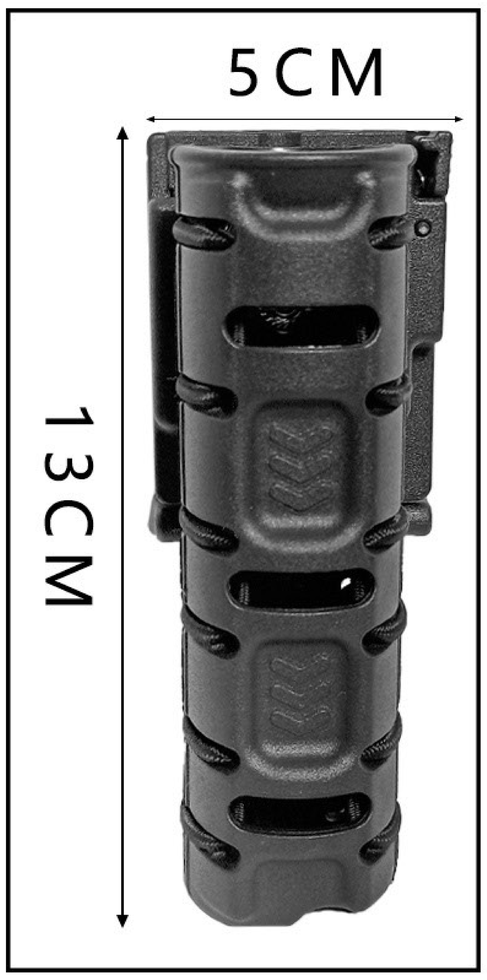

Plastic steel rubber stick sleeve

8103

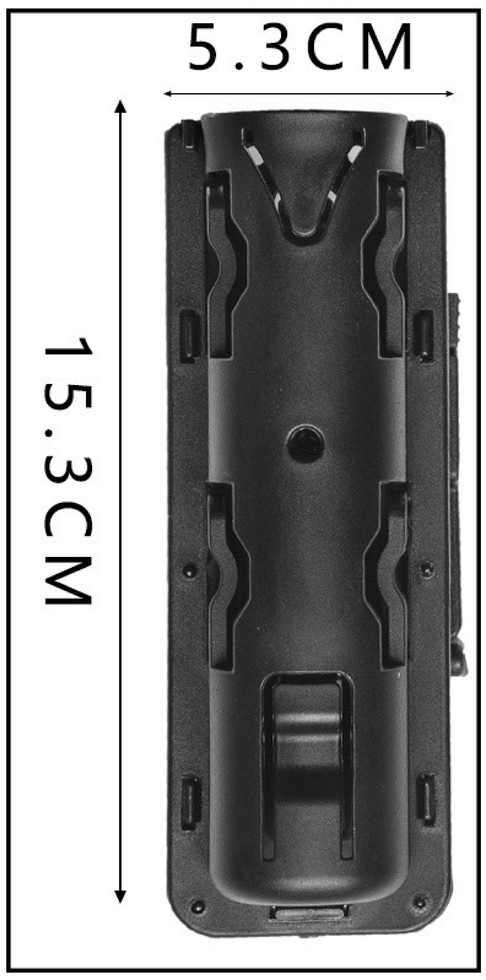

Extremely Fox Quick Pull Stick Sleeve

8104

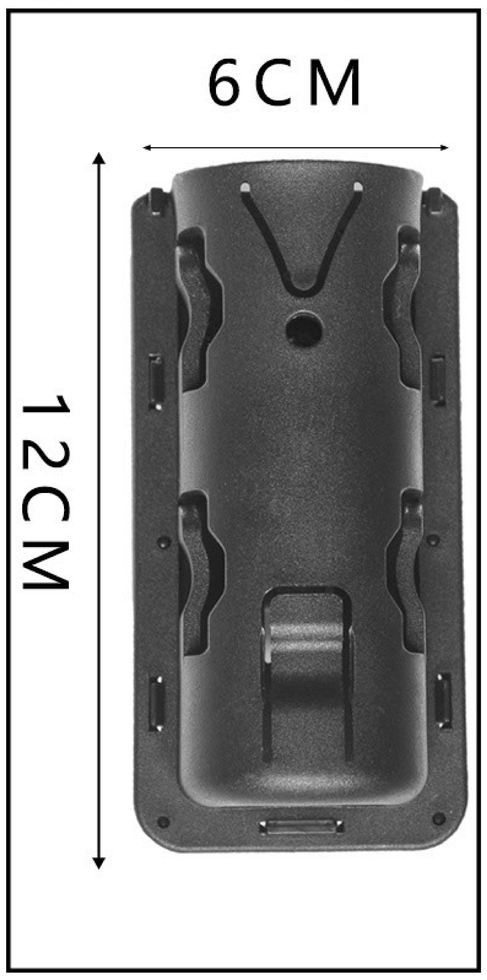

Polar Fox Quick Pull Spray Sleeve

8105

Pull out the flashlight cover quickly

8106

Plastic steel rubber band water spray sleeve

8107

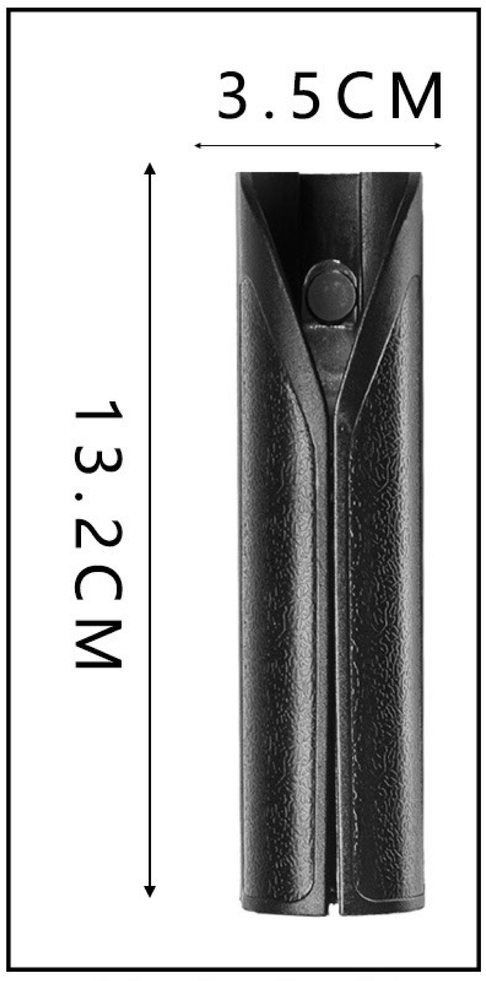

Column-type swing stick sleeve

(available in black and black and white) 8108

Column type tear gas sleeve

(available in black and white) 8109

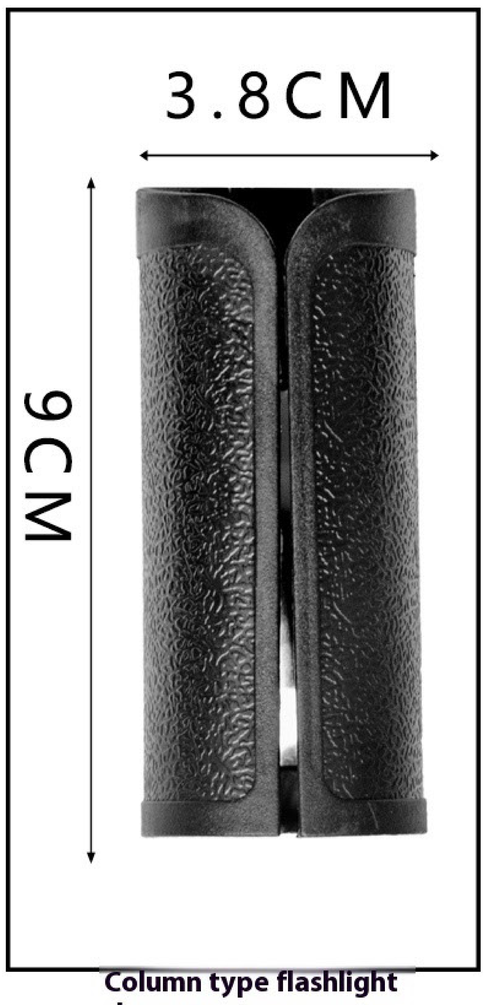

Column type flashlight sleeve

(available in black and white) 8110

Plastic steel rubber band flashlight sleeve

8111

8112

8113

8114

8115

Brazil real nylon belt 8116

8117

Korean-style military camouflage belt 8118

8119

Sri Lanka Cotton Tactical Belt 8120

8121

8122

8123

8124

Taiwan Belt 8125

8126

8127

8128

8129

8130

8131

8132

8133

8134

8135

8136

8137

8138

8139

8140

Alloy dot buckle S-strap 8141

Polyester cotton alloy polka dot buckle S belt 8142

Old Malaysia 8143

Cotton aircraft buckle S-strap 8144

8145

8146

8147

8148

8149

8150

8151

8152

8153

8154

8155

8156

8157

8158

8159

8160

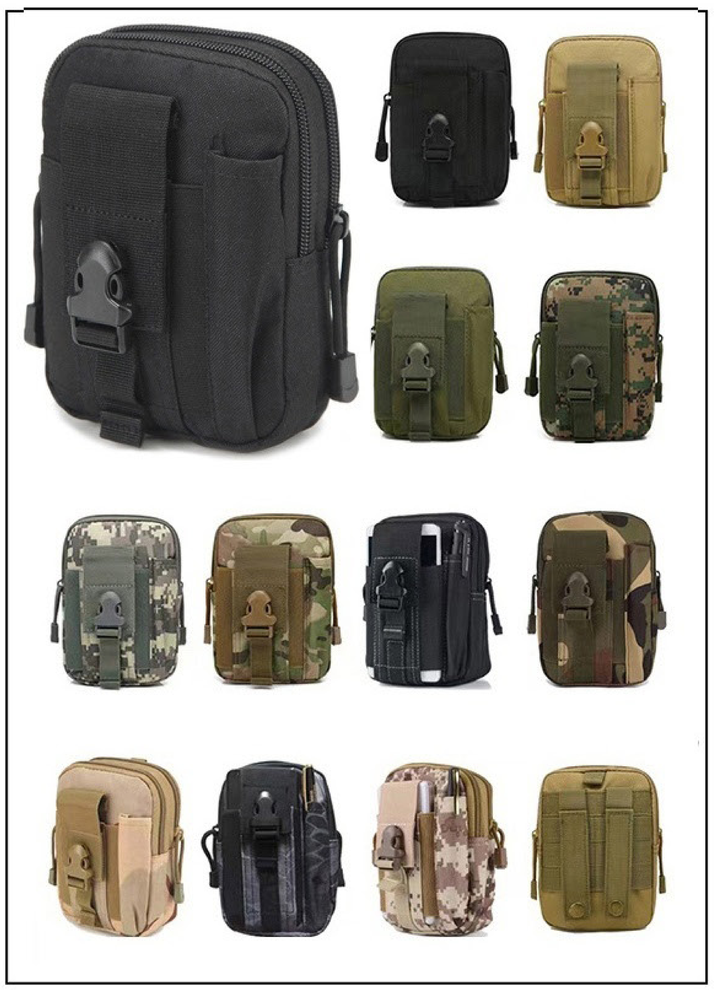

8161

8162

8163

8164

8165

8166

8167

8168

8169

8170

8171

8172

8173

8174

8175

8176

8177

8178

8179

8180

Pioneering and innovative
Facing the future